ABOUT BREN

Built to perform. Engineered to last.

High quality. Reliable. Global. BREN is a global valve manufacturer delivering high quality, reliable solutions for critical flow control applications worldwide.

QUALITY
Uncompromising standards.

RELIABILITY
Consistent performance.

GLOBAL
Worldwide reach. Local commitment.

ENGINEERING
Innovation. Precision. Excellence.

THE API VALVE SERIES



GATE



GLOBE



CHECK



BALL

BREN

VALVES THAT FLOW. TRUST THAT LASTS.

VALVE SOLUTIONS
EDITION 2026

PRODUCT CATALOGUE

API Valve Series

Gate, globe, check and ball valves for critical flow control applications, built to perform and engineered to last.



GATE
Isolation service

GLOBE
Throttling & regulation

CHECK
Backflow prevention

BALL
Quarter-turn shut-off

© 2026 BREN. Specifications subject to change without notice.

API Floating Ball

Q41/341F



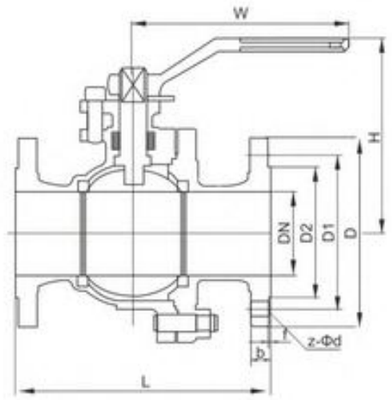

Main External Dimensions Unit: mm

DN	DN/in	L	D	D1	D2	f	b	z-Φd	H	W
Class150										
15	1/2	108	90	60.3	34.9	2	8	4-Φ16	188	120
20	3/4	117	100	69.9	42.9	2	8.9	4-Φ16	202	120
25	1	127	110	79.4	50.8	2	9.6	4-Φ16	225	140
32	1 1/4	140	115	88.9	63.5	2	11.2	4-Φ16	252	160
40	1 1/2	165	125	98.4	73	2	12.7	4-Φ16	277	180
50	2	178	150	120.7	92.1	2	14.3	4-Φ19	323	200
65	2 1/2	190	180	139.7	104.8	2	15.9	4-Φ19	347	240
80	3	203	190	152.4	127	2	17.5	4-Φ19	383	240
100	4	229	230	190.5	157.2	2	22.3	8-Φ19	457	280
125	5	356	255	215.9	185.7	2	22.3	8-Φ22.5	580	300
150	6	394	280	241.3	215.9	2	23.9	8-Φ22.5	635	300
200	8	457	345	298.5	269.9	2	27	8-Φ22.5	762	350
250	10	533	405	362	323.8	2	28.6	12-Φ25.5	910	400
300	12	610	485	431.8	381	2	30.2	12-Φ25.5	1080	500

BREN

API Floating Ball

Q41/341F

Main External Dimensions Unit: mm

DN	DN/in	L	D	D1	D2	f	b	z-Φd	H	W
Class300										
15	1/2	140	95	66.7	35	2	12.7	4-Φ16	155	140
20	3/4	152	115	82.6	43	2	14.3	4-Φ19	160	140
25	1	165	125	88.9	50.8	2	15.9	4-Φ19	186	160
32	1 1/4	178	135	98.4	63.5	2	17.5	4-Φ19	216	180
40	1 1/2	190	155	114.3	73	2	19.1	4-Φ22.5	250	200
50	2	216	165	127	92	2	20.7	8-Φ19	330	220
65	2 1/2	241	190	149.2	104.8	2	23.9	8-Φ22.5	368	250
80	3	282	210	168.3	127	2	27	8-Φ22.5	400	300
100	4	305	255	200	157.2	2	30.2	8-Φ22.5	473	300
125	5	381	280	235	185.7	2	33.4	8-Φ22.5	660	350
150	6	403	320	269.9	215.9	2	35	12-Φ22.5	711	400
200	8	502	380	330.2	269.9	2	39.7	12-Φ25.5	813	450
Class600										
15	1/2	165	95	66.7	34.9	7	14.3	4-Φ16	155	160
20	3/4	190	115	82.6	42.9	7	15.9	4-Φ19	160	190
25	1	216	125	88.9	50.8	7	17.5	4-Φ19	186	200
32	1 1/4	229	135	98.4	63.5	7	20.7	4-Φ19	216	220
40	1 1/2	241	155	114.3	73	7	22.3	4-Φ22.5	250	240
50	2	292	165	127	92.1	7	25.4	8-Φ19	375	280
65	2 1/2	330	190	149.2	104.8	7	28.6	8-Φ22.5	425	320
80	3	356	210	168.3	127	7	31.8	8-Φ22.5	475	350
100	4	432	275	215.9	157.2	7	38.1	8-Φ25.5	568	400
125	5	508	330	266.7	185.7	7	44.5	8-Φ28.5	610	500
150	6	559	355	292.1	215.9	7	47.7	12-Φ28.5	730	550

Trunnion Ball Valve

Q47/347F



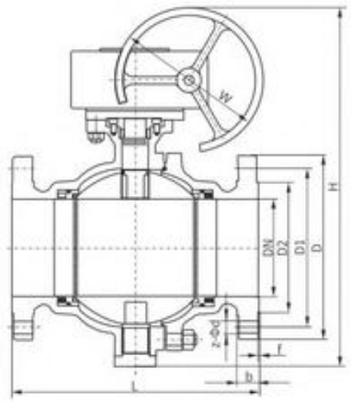

Main External Dimensions Unit: mm

DN	DN/in	L	D	D1	D2	f	b	z-Φd	H	W
Class150										
100	4	229	230	190.5	157.2	2	24.3	8-Φ19	330	300
125	5	356	255	215.9	185.7	2	24.3	8-Φ22	360	300
150	6	394	280	241.3	215.9	2	25.9	8-Φ22	392	300
200	8	457	345	298.5	269.9	2	29	8-Φ22	492	300
250	10	533	405	362	323.8	2	30.6	12-Φ25	548	300
300	12	610	485	431.8	381	2	32.2	12-Φ25	688	400
350	14	686	535	476.3	412.8	2	35.4	12-Φ29	722	400
400	16	762	595	539.8	469.9	2	37	16-Φ29	722	400
450	18	864	635	577.9	533.4	2	40.1	16-Φ32	804	500
500	20	914	700	635	584.2	2	43.3	20-Φ32	952	600
600	24	1067	815	749.3	692.2	2	48.1	20-Φ35	1154	750

BREN

Trunnion Ball Valve

Q47/347F

Main External Dimensions Unit: mm

DN	DN/in	L	D	D1	D2	f	b	z-Φd	H	W
Class300										
100	4	305	255	200	157.2	2	32.2	8-Φ22	340	300
125	5	381	280	235	185.7	2	35.4	8-Φ22	370	300
150	6	403	320	269.9	215.9	2	37	12-Φ22	402	300
200	8	502	380	330.2	269.9	2	41.7	12-Φ25	498	300
250	10	568	445	387.4	323.8	2	48.1	16-Φ29	655	400
300	12	648	520	450.8	381	2	51.3	16-Φ32	658	400
350	14	762	585	514.4	412.8	2	54.5	20-Φ32	686	400
400	16	838	650	571.5	469.9	2	57.6	20-Φ35	880	600
450	18	914	710	628.6	533.4	2	60.8	24-Φ35	1050	750
500	20	991	775	685.8	584.2	2	64	24-Φ35	1110	750
600	24	1143	915	812.8	692.2	2	70.3	24-Φ41	1400	750
Class600										
50	2	292	165	127	92.1	7	27.4	8-Φ19	240	300
65	2 1/2	330	190	149.2	104.8	7	30.6	8-Φ22	290	300
80	3	356	210	168.3	127	7	33.8	8-Φ22	340	300
100	4	432	275	215.9	157.2	7	40.1	8-Φ25	358	300
125	5	508	330	266.7	185.7	7	46.5	8-Φ29	400	300
150	6	559	355	292.1	215.9	7	49.7	12-Φ29	445	400
200	8	660	420	349.2	269.9	7	57.6	12-Φ32	498	400
250	10	787	510	431.8	323.8	7	65.5	16-Φ35	653	400
300	12	838	560	489	381	7	68.7	20-Φ35	665	500
350	14	889	605	527	412.8	7	71.9	20-Φ38	738	600
400	16	991	685	603.2	469.9	7	78.2	20-Φ41	920	750

Full Welding Trunnion Ball Valve

HQ67/367/667/967F/X



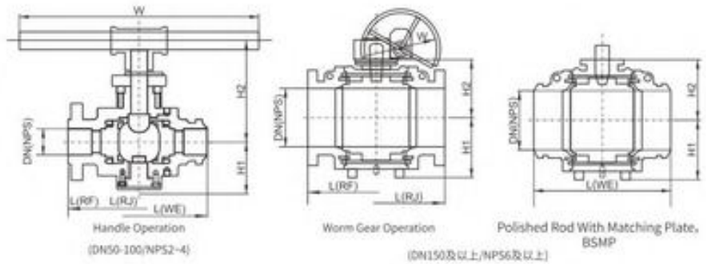

Main External Dimensions Unit: mm

DN	NPS	L			H1	H2	W	Torque (N·M)
		RF	WE	RJ				
Class 150								
50	2	178	216	191	99	210	300	42
65	2 1/2	191	241	203	110	215	350	68
80	3	203	283	216	120	225	400	92
100	4	229	305	241	148	255	650	145
150	6	394	457	406	218	237	460	210
200	8	457	521	470	260	290	600	625
250	10	533	559	546	292.5	323.5	600	835
300	12	610	635	622	327.5	359.5	600	1150
350	14	686	762	699	365	395	750	1560
400	16	762	838	775	437.5	436.5	750	2375
450	18	864	914	876	485	487.5	750	2850
500	20	914	991	927	522.5	525	750	3580
550	22	991	1092	1004	575.5	560	750	4275
600	24	1067	1143	1080	607.5	617.5	750	5650
650	26	1143	1245	1156	640	632.5	750	6520
700	28	1245	1346	1285	670	682.5	750	7380
750	30	1295	1397	1308	710	760	750	8380
800	32	1372	1524	1385	730	780	750	9370
850	34	1473	1626	1486	780	830	750	12065
900	36	1524	1727	1537	830	880	750	14760
1000	40	1753	1956	1985	875	920	750	18465
1050	42	1829	2083	2115	910	945	750	29210
1200	48	2032	2388	2418	1070	1085	750	44500

BREN

Full Welding Trunnion Ball Valve

HQ67/367/667/967F/X

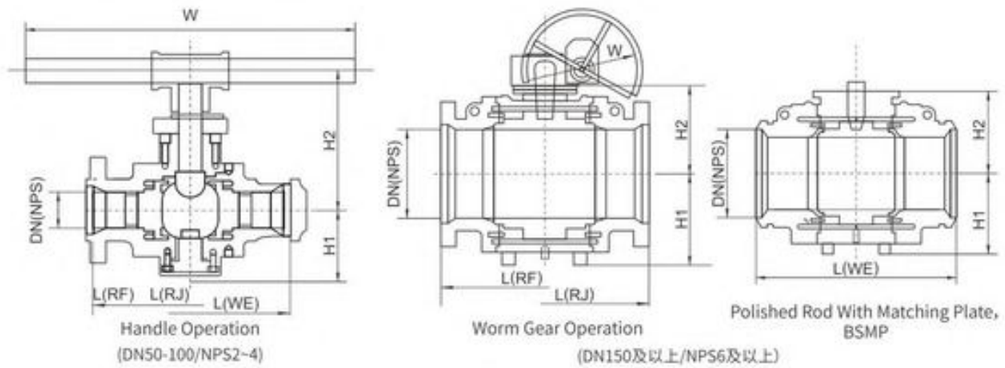

Main External Dimensions Unit: mm

DN	NPS	L			H1	H2	W	Torque (N·M)
		RF	WE	RJ				
Class 150								
80×50	3×2	203	283	216	99	210	300	42
100×80	4×3	229	305	241	120	225	400	92
150×100	6×4	394	457	406	148	255	650	145
200×150	8×6	457	521	470	218	237	460	210
250×200	10×8	533	559	546	260	290	600	625
300×250	12×10	610	635	622	292.5	323.5	600	835
350×300	14×12	686	762	699	327.5	359.5	600	1150
400×350	16×14	762	838	775	365	395	750	1560
450×400	18×16	864	914	876	437.5	436.5	750	2375
500×450	20×18	914	991	927	485	487.5	750	2850
600×500	24×20	1067	1143	1080	522.5	525	750	3580
700×600	28×24	1245	1346	1285	607.5	617.5	750	5650
750×600	30×24	1295	1397	1308	607.5	617.5	750	5650
750×700	30×28	1295	1397	1308	670	682.5	750	7380
800×700	32×28	1372	1524	1385	670	682.5	750	7380
800×750	32×30	1372	1524	1385	710	760	750	8380
900×750	36×30	1524	1727	1537	710	760	750	8380
900×800	36×32	1524	1727	1537	730	780	750	9370
1000×900	40×36	1524	1727	1537	830	880	750	14760

Trunnion Forged Steel Ball Valve

Q47/347/947/67/367/967F



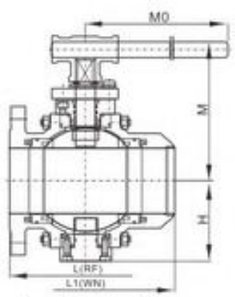

Manual Operation, MA

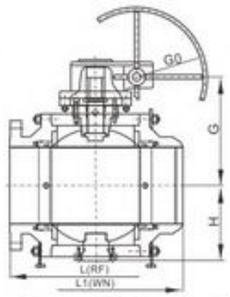

Worm Gear Operation, GA

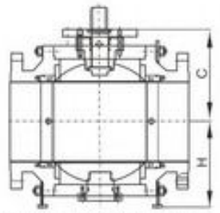

Polished Rod With Matching Plate, BSMP

Main External Dimensions Unit: mm

DN	NPS	L(RF)	L1(WN)	Handle MA		Worm Gear Drive GA		C	H	Torque (N.M)
				M	M0	G	G0			
Class150										
50	2	178	216	130	250	--	--	105	100	57
65	2 1/2	191	241	142	300	--	--	130	110	71
80	3	203	283	191	350	185	280	155	125	95
100	4	229	305	200	500	235	280	200	160	192
150	6	394	457	226	800	325	300	250	185	485
200	8	457	521	242	1000	390	400	278	222	832
250	10	533	559	--	--	445	400	323	280	1105
300	12	610	635	--	--	520	500	340	303	1655
350	14	686	762	--	--	550	500	375	330	2695
400	16	762	838	--	--	580	600	410	355	3164
450	18	864	914	--	--	605	600	440	390	3793
500	20	914	991	--	--	610	600	495	430	5500
550	22	991	1092	--	--	670	600	525	475	6650
600	24	1067	1143	--	--	725	700	585	520	7529
650	26	1143	1245	--	--	760	700	630	560	8693
700	28	1245	1346	--	--	790	700	645	650	10770
750	30	1295	1397	--	--	825	700	690	700	12365
800	32	1372	1524	--	--	870	700	740	745	14070
850	34	1473	1626	--	--	910	700	760	775	21148
900	36	1524	1727	--	--	950	700	810	805	22987
1000	40	1753	1656	--	--	1005	700	895	900	26059
1050	42	1790	2083	--	--	1045	800	950	935	28149
1200	48	1995	2388	--	--	1235	800	1095	1070	42776
1400	56	2489	2489	--	--	1450	800	1300	1250	65654
1500	60	2640	2640	--	--	1550	1000	1380	1350	85654
1600	64	--	--	--	--	--	--	--	--	--

BREN

Trunnion Forged Steel Ball Valve

Q47/347/947/67/367/967F

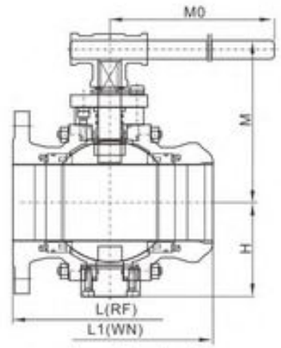

Manual Operation, MA

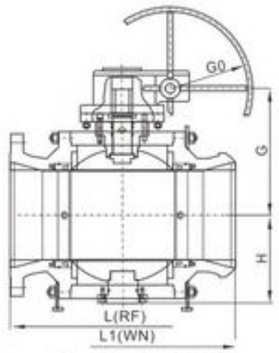

Worm Gear Operation, GA

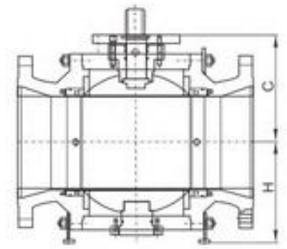

Polished Rod With Matching Plate, BSMP

Main External Dimensions Unit: mm

DNxDN'	NPSxNPS'	L(RF)	L1(WN)	Handle MA		Worm Gear Drive GA		C	H	Torque (N.M)
				M	M0	G	G0			
Reducing Diameter Class150										
50x40	2x1 1/2	178	216	100	200	--	--	95	100	28
80x50	3x2	203	283	130	250	--	--	105	100	57
100x80	4x3	229	305	191	350	185	280	155	125	95
150x100	6x4	394	457	200	500	235	280	200	160	192
200x150	8x6	457	521	226	800	325	300	250	185	485
250x200	10x8	533	559	242	1000	390	400	278	222	832
300x250	12x10	610	635	--	--	445	400	323	280	1105
350x250	14x10	686	762	--	--	445	400	323	280	1105
350x300	14x12	686	762	--	--	520	500	340	303	1655
400x300	16x12	762	838	--	--	520	500	340	303	1655
400x350	16x14	762	838	--	--	550	500	375	330	2695
450x350	18x14	864	914	--	--	550	500	375	330	2695
450x400	18x16	864	914	--	--	580	600	410	355	3164
500x400	20x16	914	991	--	--	580	600	410	355	3164
500x450	20x18	914	991	--	--	605	600	440	390	3793
600x500	24x20	1067	1143	--	--	610	600	495	430	5500
750x600	30x24	1295	1397	--	--	725	700	585	520	7529
900x750	36x30	1524	1727	--	--	825	700	690	700	12365

Fixed Forged Steel Ball Valve

Q47/347/947/67/367/967F

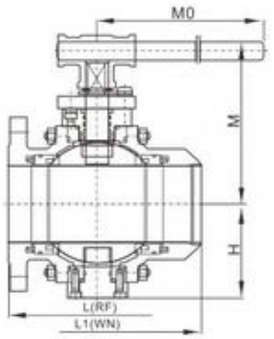

Manual operation, MA

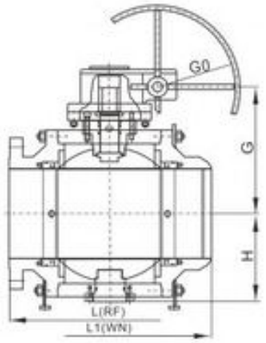

Worm Gear Operation, GA

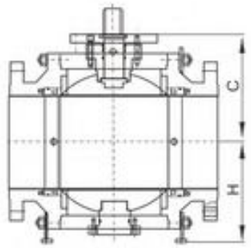

Polished Rod With Matching Plate, BSMP

Main External Dimensions Unit: mm

DN	NPS	L(RF)	L1(WN)	Handle MA		Worm Gear Drive GA		C	H	Torque (N.M)
				M	M0	G	G0			
Class300										
50	2	216	216	130	250	--	--	105	100	99
65	2 1/2	241	241	142	300	--	--	130	110	124
80	3	283	283	191	350	185	280	155	125	212
100	4	305	305	200	500	235	280	200	160	335
150	6	457	457	226	800	325	300	250	203	544
200	8	502	502	242	1000	390	400	278	232	1250
250	10	568	568	--	--	445	400	333	298	1736
300	12	648	648	--	--	520	500	360	333	2388
350	14	762	762	--	--	550	500	395	350	3224
400	16	838	838	--	--	580	600	433	398	5139
450	18	914	914	--	--	605	600	460	410	7970
500	20	991	991	--	--	610	600	505	470	10570
550	22	1092	1092	--	--	670	600	530	485	12140
600	24	1143	1143	--	--	725	700	590	550	17240
650	26	1245	1245	--	--	760	700	635	585	20340
700	28	1346	1346	--	--	790	700	645	670	25069
750	30	1397	1397	--	--	825	700	700	730	27640
800	32	1524	1524	--	--	870	700	750	770	29550
850	34	1626	1626	--	--	910	700	760	800	31558
900	36	1727	1727	--	--	950	700	810	825	35170
1000	40	1956	1956	--	--	1005	700	905	920	39115
1050	42	2083	2083	--	--	1045	800	960	955	42414
1200	48	2170	2170	--	--	1235	800	1100	1105	71868
1400	56	2743	2743	--	--	1450	1000	1300	1275	108550

BREN

Fixed Forged Steel Ball Valve

Q47/347/947/67/367/967F

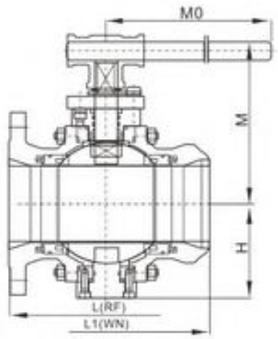

Manual operation, MA

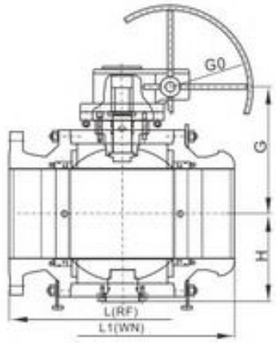

Worm Gear Operation, GA

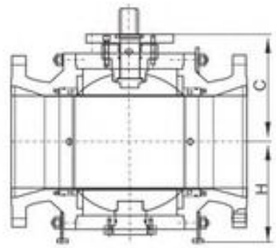

Polished Rod With Matching Plate, BSMP

Main External Dimensions Unit: mm

DNxDN'	NPSxNPS'	L(RF)	L1(WN)	Handle MA		Worm Gear Drive GA		C	H	Torque (N.M)
				M	M0	G	G0			
Reducing Diameter Class300										
50x40	2x1 1/2	216	216	100	200	--	--	95	100	50
80x50	3x2	283	283	130	250	--	--	105	100	99
100x80	4x3	305	305	191	350	185	280	155	125	212
150x100	6x4	457	457	200	500	235	280	200	160	335
200x150	8x6	502	502	226	800	325	300	250	203	544
250x200	10x8	568	568	242	1000	390	400	278	232	1250
300x250	12x10	648	648	--	--	445	400	333	298	1736
350x250	14x10	762	762	--	--	445	400	333	298	1736
350x300	14x12	762	762	--	--	520	500	360	333	2388
400x300	16x12	838	838	--	--	520	500	360	333	2388
400x350	16x14	838	838	--	--	550	500	395	350	3224
450x350	18x14	914	914	--	--	550	500	395	350	3224
450x400	18x16	914	914	--	--	580	600	433	398	5139
500x400	20x16	991	991	--	--	580	600	433	398	5139
500x450	20x18	991	991	--	--	605	600	460	410	7970
600x500	24x20	1143	1143	--	--	610	600	505	470	10570
750x600	30x24	1397	1397	--	--	725	700	590	550	17240
900x750	36x30	1727	1727	--	--	825	700	700	730	27640

Fixed Forged Steel Ball Valve

HQ67/367/667/967F/X

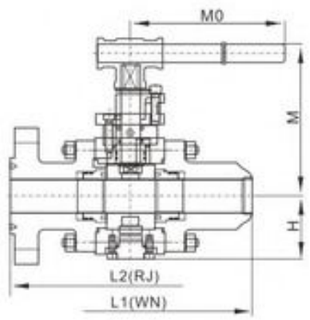

Manual Operation, MA

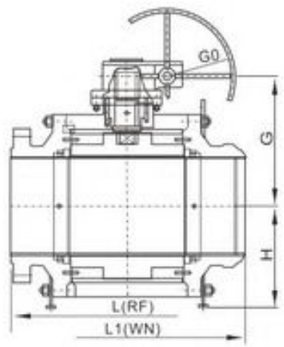

Worm Gear Drive Operation, GA

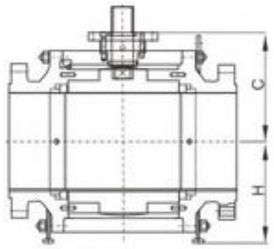

Bare Rod With Matching Plate, BSMP

Main External Dimensions Unit: mm

DN	NPS	L(RF)	L1(WN)	L2(RJ)	Handle MA		Worm Gear Drive GA		C	H	Torque (N.M)
					M	M0	G	G0			
Class600											
50	2	292	292	295	136	500	--	--	105	100	168
65	21/2	330	330	333	164	650	--	--	135	115	210
80	3	356	356	359	191	650	220	300	165	130	360
100	4	432	432	435	244	800	254	400	210	162	572
150	6	559	559	562	--	--	360	400	253	203	912
200	8	660	660	664	--	--	390	400	290	257	2177
250	10	787	787	791	--	--	450	500	333	310	3093
300	12	838	838	841	--	--	500	500	380	350	4282
350	14	889	889	892	--	--	520	500	395	360	7458
400	16	991	991	994	--	--	550	500	433	413	9310
450	18	1092	1092	1095	--	--	635	600	470	430	14693
500	20	1194	1194	1200	--	--	675	600	505	490	20011
550	22	1295	1295	1305	--	--	728	600	545	510	24785
600	24	1397	1397	1407	--	--	780	600	595	570	31226
650	26	1448	1448	1461	--	--	810	700	635	620	35184
700	28	1549	1549	1562	--	--	840	700	665	690	38987
750	30	1651	1651	1664	--	--	870	800	710	750	41832
800	32	1778	1778	1794	--	--	915	800	755	780	63865
850	34	1930	1930	1946	--	--	951	800	780	815	71720
900	36	2083	2083	2099	--	--	987	1000	815	840	89020
1000	40	2337	2337	2366	--	--	1212	1000	915	940	109900
1050	42	2439	2439	2467	--	--	1292	1000	970	980	121165
1200	48	2540	2540	2540	--	--	1440	1000	1105	1120	145345
1400	56	2949	2949	2949	--	--	1600	1000	1300	1290	169230

BREN

Fixed Forged Steel Ball Valve

HQ67/367/667/967F/X

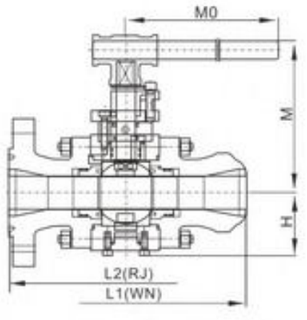

Manual Operation, MA

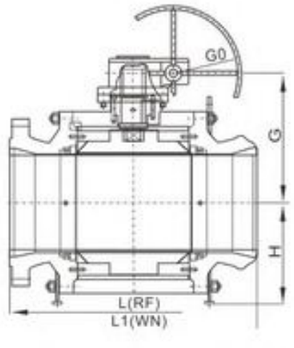

Worm Gear Drive Operation, GA

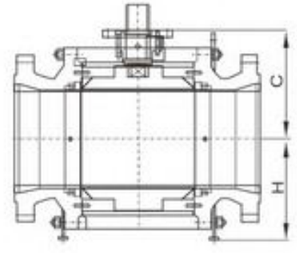

Bare Rod With Matching Plate, BSMP

Main External Dimensions Unit: mm

DNxDN'	NPSxNPS'	L(RF)	L1(WN)	L2(RJ)	Handle MA		Worm Gear Drive GA		C	H	Torque (N.M)
					M	M0	G	G0			
Reducing Diameter Class600											
50x40	2x11/2	292	292	295	110	350	--	--	95	100	130
80x50	3x2	356	356	359	136	500	--	--	105	100	168
100x80	4x3	432	432	435	191	650	220	300	165	130	360
150x100	6x4	559	559	562	244	800	254	400	210	162	572
200x150	8x6	660	660	664	--	--	360	400	253	203	912
250x200	10x8	787	787	791	--	--	390	400	290	257	2177
300x250	12x10	838	838	841	--	--	450	500	333	310	3093
350x250	14x10	889	889	892	--	--	450	500	333	310	3093
350x300	14x12	889	889	892	--	--	500	500	380	350	4282
400x300	16x12	991	991	994	--	--	500	500	380	350	4282
400x350	16x14	991	991	994	--	--	520	500	395	360	7458
450x350	18x14	1092	1092	1095	--	--	520	500	395	360	7458
450x400	18x16	1092	1092	1095	--	--	550	500	433	413	9310
500x400	20x16	1194	1194	1200	--	--	550	500	433	413	9310
500x450	20x18	1194	1194	1200	--	--	635	600	470	430	14693
600x500	24x20	1397	1397	1407	--	--	675	600	505	490	20011
750x600	30x24	1651	1651	1664	--	--	780	600	595	570	31226
900x750	36x30	2083	2083	2099	--	--	870	800	710	750	41832

Fixed Forged Steel Ball Valve

HQ67/367/667/967F/X

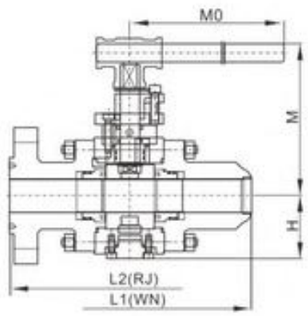

Manual Operation, MA

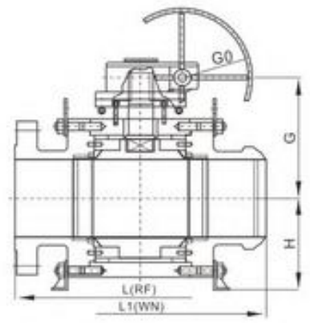

Worm Gear Drive Operation, GA

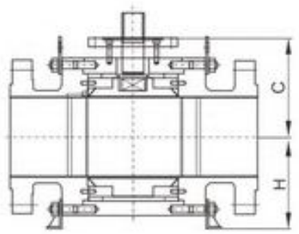

Bare Rod With Matching Plate, BSMP

Main External Dimensions Unit: mm

DN	NPS	L(RF)	L1(WN)	L2(RJ)	Handle MA		Worm Gear Drive GA		C	H	Torque (N.M)
					M	M0	G	G0			
Class900											
50	2	368	368	371	148	650	--	--	105	110	228
65	21/2	419	419	422	191	650	--	--	135	118	263
80	3	381	381	384	216	800	255	400	165	130	512
100	4	457	457	460	--	--	285	400	210	167	946
150	6	610	610	613	--	--	370	400	260	251	1784
200	8	737	737	740	--	--	400	500	295	280	4116
250	10	838	838	841	--	--	450	500	345	340	5910
300	12	965	965	968	--	--	500	500	384	390	10137
350	14	1029	1029	1038	--	--	520	500	400	442	14141
400	16	1130	1130	1140	--	--	550	600	440	490	18866
450	18	1219	1219	1232	--	--	600	600	482	500	22400
500	20	1321	1321	1334	--	--	630	600	530	500	28544
550	22	--	--	--	--	--	--	--	--	--	--
600	24	1549	1549	1568	--	--	810	700	615	630	43276
650	26	1651	1651	1673	--	--	850	700	650	650	48580
700	28	1753	1753	1775	--	--	900	800	670	710	60000
750	30	1880	1880	1902	--	--	980	1000	725	780	76000
800	32	2032	2032	2054	--	--	1240	1000	785	810	90195
850	34	2159	2159	2188	--	--	1275	1000	805	850	100460
900	36	2286	2286	2315	--	--	1310	1000	845	900	131875
1000	40	2283	2283	2311	--	--	1420	1000	955	980	--
1050	42	2438	2438	2461	--	--	1455	1000	986	990	--
1200	48	2769	2769	2797	--	--	1530	1000	1150	1199	--

BREN

Fixed Forged Steel Ball Valve

HQ67/367/667/967F/X

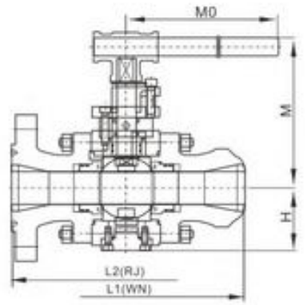

Manual Operation, MA

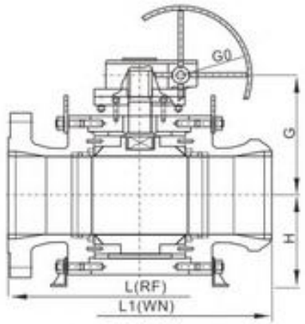

Worm Gear Drive Operation, GA

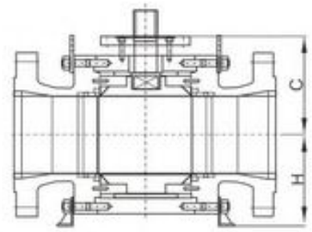

Bare Rod With Matching Plate, BSMP

Main External Dimensions Unit: mm

DNxDN'	NPSxNPS'	L(RF)	L1(WN)	L2(RJ)	Handle MA		Worm Gear Drive GA		C	H	Torque (N.M)
					M	M0	G	G0			
Reducing Diameter Class900											
50x40	2x1 1/2	368	368	371	128	500	--	--	105	110	163
80x50	3x2	381	381	384	148	650	--	--	105	110	228
100x80	4x3	457	457	460	216	650	255	400	165	130	512
150x100	6x4	610	610	613	--	--	285	400	210	167	946
200x150	8x6	737	737	740	--	--	370	400	260	251	1784
250x200	10x8	838	838	841	--	--	400	500	295	280	4116
300x250	12x10	965	965	968	--	--	450	500	345	340	5910
350x250	14x10	1029	1029	1038	--	--	450	500	345	340	5910
350x300	14x12	1029	1029	1038	--	--	500	500	384	390	10137
400x300	16x12	1130	1130	1140	--	--	500	500	384	390	10137
400x350	16x14	1130	1130	1140	--	--	520	500	400	442	14141
450x350	18x14	1219	1219	1232	--	--	520	500	400	442	14141
450x400	18x16	1219	1219	1232	--	--	550	600	440	490	18866
500x400	20x16	1321	1321	1334	--	--	550	600	440	490	18866
500x450	20x18	1321	1321	1334	--	--	600	600	482	500	22400
600x500	24x20	1549	1549	1568	--	--	630	600	530	500	28544
750x600	30x24	1880	1880	1902	--	--	810	700	615	630	43276
900x750	36x30	2286	2286	2315	--	--	980	1000	725	780	76000

Fixed Forged Steel Ball Valve

HQ67/367/667/967F/X

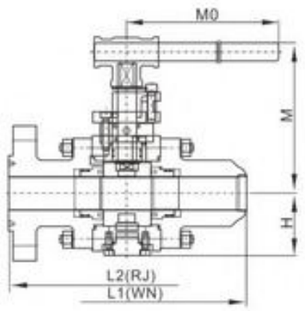

Manual Operation, MA

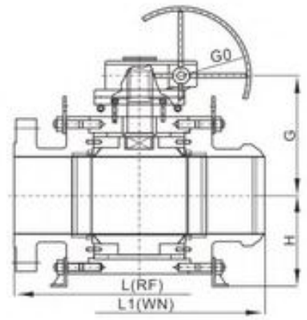

Worm Gear Drive Operation, GA

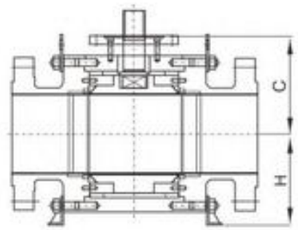

Bare Rod With Matching Plate, BSMP

Main External Dimensions Unit: mm

DN	NPS	L(RF)	L1(WN)	L2(RJ)	Handle MA		Worm Gear Drive GA		C	H	Torque (N.M)
					M	M0	G	G0			
Class1500											
50	2	368	368	371	175	650	--	--	105	105	390
65	2 1/2	419	419	422	191	650	--	--	138	120	448
80	3	470	470	473	216	750	255	500	165	130	931
100	4	546	546	549	--	--	285	500	215	167	1524
150	6	705	705	711	--	--	460	500	260	270	2934
200	8	832	832	841	--	--	520	500	300	300	7215
250	10	991	991	1000	--	--	640	500	365	360	10990
300	12	1130	1130	1146	--	--	720	500	420	423	16103
350	14	1257	1257	1276	--	--	760	500	440	460	24518
400	16	1384	1384	1407	--	--	820	600	480	510	29630
450	18	1537	1537	1559	--	--	880	600	550	600	34392
500	20	1664	1664	1686	--	--	900	700	620	650	40918
550	22	--	--	--	--	--	--	--	--	--	--
600	24	--	--	1972	--	--	920	800	700	720	65351

BREN

Fixed Forged Steel Ball Valve

HQ67/367/667/967F/X

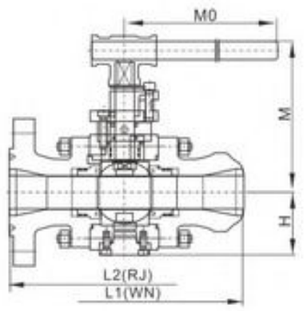

Manual Operation, MA

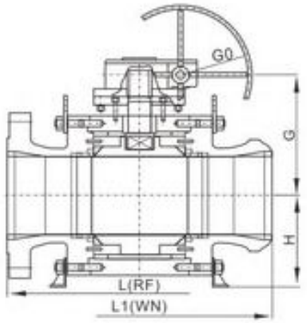

Worm Gear Drive Operation, GA

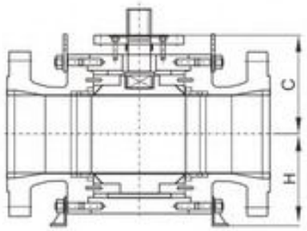

Bare Rod With Matching Plate, BSMP

Main External Dimensions Unit: mm

DNxDN'	NPSxNPS'	L(RF)	L1(WN)	L2(RJ)	Handle MA		Worm Gear Drive GA		C	H	Torque (N.M)
					M	M0	G	G0			
Reducing Diameter Class1500											
50x40	2x1 1/2	368	368	371	160	600	--	--	105	105	181
80x50	3x2	470	470	473	175	650	--	--	105	105	390
100x80	4x3	546	546	549	216	750	255	500	165	130	931
150x100	6x4	705	705	711	--	--	285	500	215	167	1524
200x150	8x6	832	832	841	--	--	460	500	260	270	2934
250x200	10x8	991	991	1000	--	--	520	500	300	300	7215
300x250	12x10	1130	1130	1146	--	--	640	500	365	360	10990
350x250	14x10	1257	1257	1276	--	--	640	500	365	360	10990
350x300	14x12	1257	1257	1276	--	--	720	500	420	423	16103
400x300	16x12	1384	1384	1407	--	--	720	500	420	423	16103
400x350	16x14	1384	1384	1407	--	--	760	500	440	460	24518
450x350	18x14	1537	1537	1559	--	--	760	500	440	460	24518
450x400	18x16	1537	1537	1559	--	--	820	600	480	510	29630
500x400	20x16	1664	1664	1686	--	--	820	600	480	510	29630
500x450	20x18	1664	1664	1686	--	--	880	600	550	600	34392
600x500	24x20	--	--	1972	--	--	900	700	620	650	40918

Fixed Forged Steel Ball Valve

HQ67/367/667/967F/X

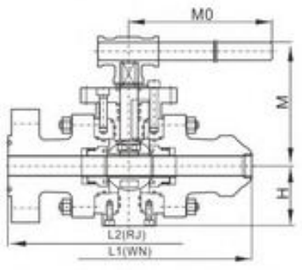

Manual Operation, MA

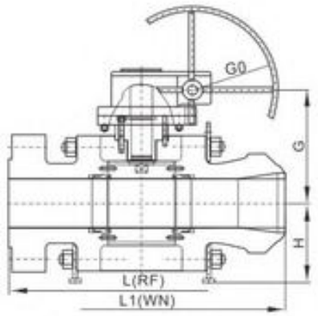

Worm Gear Drive Operation, GA

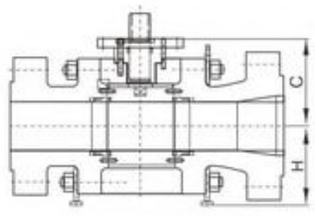

Bare Rod With Matching Plate, BSMP

Main External Dimensions Unit: mm

DN	NPS	L(RF)	L1(WN)	L2(RJ)	Handle MA		Worm Gear Drive GA		C	H	Torque (N.M)
					M	M0	G	G0			
Class2500											
50	2	451	451	454	168	800	170	350	120	125	589
65	2 1/2	508	508	514	190	1000	210	450	140	160	736
80	3	578	578	584	205	1000	250	500	175	200	1577
100	4	673	673	683	--	--	290	500	225	230	1965
150	6	914	914	927	--	--	340	600	260	250	5501
200	8	1022	1022	1038	--	--	470	600	380	340	11786
250	10	1270	1270	1292	--	--	490	700	450	425	13222
300	12	1422	1422	1445	--	--	615	800	515	480	20075

Main External Dimensions Unit: mm

DNxDN'	NPSxNPS'	L(RF)	L1(WN)	L2(RJ)	Handle MA		Worm Gear Drive GA		C	H	Torque (N.M)
					M	M0	G	G0			
Reducing Diameter Class2500											
50x40	2x1 1/2	451	451	454	155	800	--	--	115	105	320
80x50	3x2	578	578	584	168	800	170	350	120	125	589
100x80	4x3	673	673	683	205	1000	250	500	175	200	1577
150x100	6x4	914	914	927	--	--	290	500	2285	230	1965
200x150	8x6	1022	1022	1038	--	--	340	600	260	250	5501
250x200	10x8	1270	1270	1292	--	--	470	600	380	340	11786
300x250	12x10	1422	1422	1445	--	--	490	700	450	425	13222

API Gate Valve

Z41/541/941H/W/Y



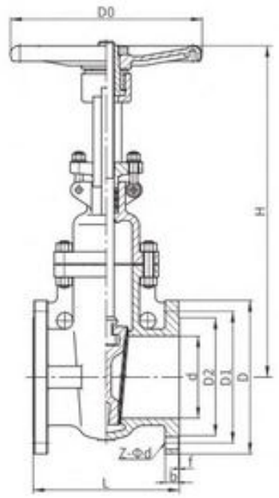

Hand wheel drive

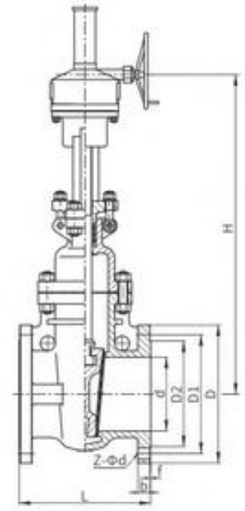

Gear Drive

Main External Dimensions(Class 150) Unit: mm

NPS	L	D	D1	D2	D6	b-f	f2	Z-Φd	H	D0
1/2	108	90	60.3	34.9	/	8-2	/	4-16	188	120
3/4	117	100	69.9	42.9	/	8.9-2	/	4-16	202	120
1	127	110	79.4	50.8	/	9.6-2	/	4-16	225	140
1-1/4	140	115	88.9	63.5	/	11.2-2	/	4-16	252	160
1-1/2	165	125	98.4	73	/	12.7-2	/	4-16	277	180
2	178	150	120.7	92.1	/	14.3-2	/	4-19	310	200
2-1/2	190	180	139.7	104.8	/	15.9-2	/	4-19	380	220
3	203	190	152.4	127	/	17.5-2	/	4-19	412	240
4	229	230	190.5	157.2	/	22.3-2	/	8-19	471	280
5	254	255	215.9	185.7	/	22.3-2	/	8-22	516	300
6	267	280	241.3	215.9	/	23.9-2	/	8-22	588	300
8	292	345	298.5	269.9	/	27-2	/	8-22	741	350
10	330	405	362	323.8	/	28.6-2	/	12-25	903	400
12	356	485	431.8	381	/	30.2-2	/	12-25	1054	500
14	381	535	476.3	412.8	/	33.4-2	/	12-29	1295	600
16	406	595	539.8	469.9	/	35-2	/	16-29	1435	600
18	432	635	577.9	533.4	/	38.1-2	/	16-32	1626	650
20	457	700	635	584.2	/	41.3-2	/	20-32	1859	650
24	508	815	749.5	692.2	/	46.1-2	/	20-35	2175	700
26	559	870	806.4	749	/	66.7-2	/	24-35	2387	/
28	610	925	863.6	800	/	69.9-2	/	28-35	2590	/
30	610	985	914.4	857	/	73.1-2	/	28-35	2819	/
32	711	1060	977.9	914	/	79.4-2	/	28-41	2870	/
36	711	1170	1085.8	1022	/	88.9-2	/	32-41	2997	/
40	1067	1290	1200.2	1124	/	88.9-2	/	36-41	3302	/

API Gate Valve

Z41/541/941H/W/Y

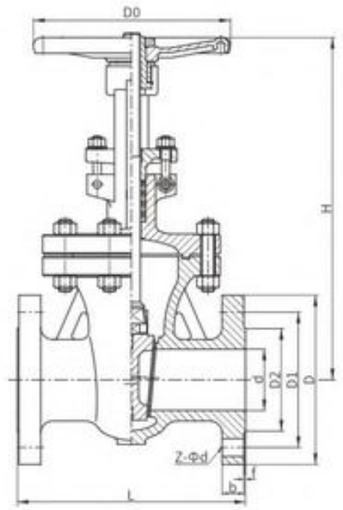

Hand wheel drive

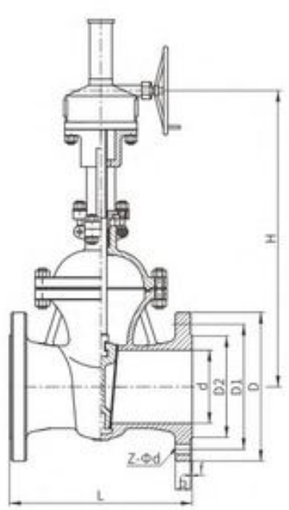

Gear Drive

Main External Dimensions(Class 300) Unit: mm

NPS	L	D	D1	D2	D6	b-f	f2	Z-Φd	H	D0
1/2	140	95	66.7	34.9	/	12.7-2	/	4-16	188	120
3/4	152	115	82.6	42.9	/	14.3-2	/	4-19	202	120
1	165	125	88.9	50.8	/	15.9-2	/	4-19	225	140
1-1/4	178	135	98.4	63.5	/	17.5-2	/	4-19	252	160
1-1/2	190	155	114.3	73	/	19.1-2	/	4-22	277	180
2	216	165	127	92.1	/	20.7-2	/	8-19	353	250
2-1/2	241	190	149.2	104.8	/	23.9-2	/	8-22.5	377	250
3	282	210	168.3	127	/	27-2	/	8-22.5	397	300
4	305	255	200	157.2	/	30.2-2	/	8-22.5	482	300
5	381	280	235	185.7	/	33.4-2	/	8-22.5	568	350
6	403	320	269.9	215.9	/	35-2	/	12-22.5	625	350
8	419	380	330.2	269.9	/	39.7-2	/	12-25.5	776	400
10	457	445	387.4	323.8	/	46.1-2	/	16-29	958	500
12	502	520	450.8	381	/	49.3-2	/	16-32	1135	600
14	762	585	514.4	412.8	/	52.4-2	/	20-32	1205	600
16	838	650	571.5	469.9	/	55.6-2	/	20-35	1367	650
18	914	710	628.6	533.4	/	58.8-2	/	24-35	2077	/
20	991	775	685.8	584.2	/	62-2	/	24-35	2310	/
24	1143	915	812.8	692.2	/	68.3-2	/	24-41	2810	/
26	1245	970	876.3	749	/	77.8-2	/	28-45	3105	/
28	1346	1035	939.8	800	/	84.2-2	/	28-45	3300	/

API Gate Valve

Z41/541/941H/W/Y

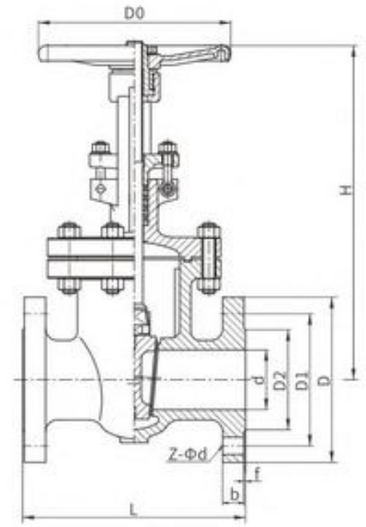

Hand wheel drive

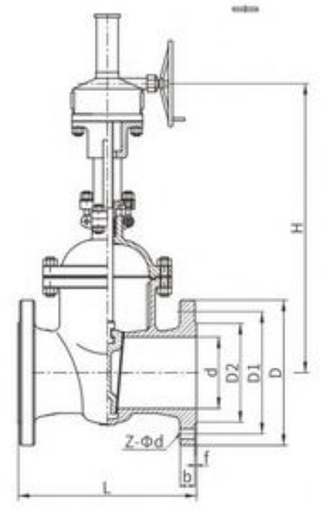

Gear Drive

Main External Dimensions(Class 600/900) Unit: mm

NPS	L	D	D1	D2	D6	b-f	f2	Z-Φd	H	D0
Class 600										
1/2	165	95	66.7	34.9	/	14.3-7	/	4-16	195	200
3/4	190	115	82.6	42.9	/	15.9-7	/	4-19	210	240
1	216	125	88.9	50.8	/	17.5-7	/	4-19	238	240
1-1/4	229	135	98.4	63.5	/	20.7-7	/	4-19	278	300
1-1/2	241	155	114.3	73	/	22.3-7	/	4-22	312	300
2	292	165	127	92.1	/	25.4-7	/	8-19	379	350
2-1/2	330	190	149.2	104.8	/	28.6-7	/	8-22.5	420	400
3	356	210	168.3	127	/	31.8-7	/	8-22.5	461	450
4	432	275	215.9	157.2	/	38.1-7	/	8-25.5	545	500
5	508	330	266.7	185.7	/	44.5-7	/	8-29	630	600
6	559	355	292.1	215.9	/	47.7-7	/	12-29	745	700
8	660	420	349.2	269.9	/	55.6-7	/	12-32	881	700
10	787	510	431.8	323.8	/	63.5-7	/	16-35	1062	800
12	838	560	489	381	/	66.7-7	/	20-35	1194	/
14	889	605	527	412.8	/	69.9-7	/	20-38	1630	/
16	991	685	603.2	469.9	/	76.2-7	/	20-41	2032	/
18	1092	745	654	533.4	/	82.6-7	/	20-44.5	2186	/
20	1194	815	723.9	584.2	/	88.9-7	/	24-44.5	2420	/
24	1397	940	838.2	692.2	/	101.6-7	/	24-51	2845	/
Class 900										
2	368	215	165.1	92.1	/	38.1-7	/	8-25	465	300
2-1/2	419	245	190.5	104.8	/	41.3-7	/	8-29	525	400
3	381	240	190.5	127	/	38.1-7	/	8-25	625	500
4	457	290	235	157.2	/	44.5-7	/	8-32	855	550
5	559	350	279.4	185.7	/	50.8-7	/	8-35	960	600
6	610	380	317.5	215.9	/	55.6-7	/	12-32	1195	700
8	737	470	393.7	269.9	/	63.5-7	/	12-38	1220	/
10	838	545	469.9	323.8	/	69.9-7	/	16-38	1440	/
12	965	610	533.4	381	/	79.4-7	/	20-38	1622	/
14	1029	640	558.8	412.8	/	85.8-7	/	20-41	1790	/
16	1130	705	616	469.9	/	88.9-7	/	20-44	1915	/

High Temperature And High Pressure Gate Valve

Z61/561/961Y



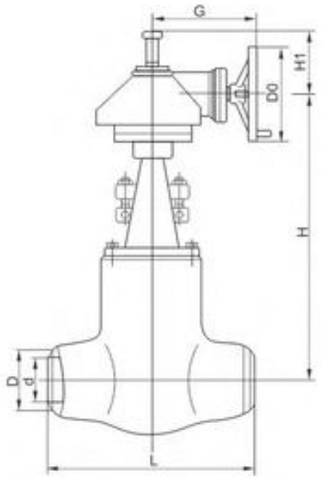

Main External Dimensions Unit: mm

NPS/in	d	L	H	D0	L1	L2
Z960Y-CL1500 Z961Y-CL1500						
2 1/2	56	254	520	200	140	243
3	64	305	523	200	140	243
4	84	406	599	508	198	281
			599	305	400	555
5	100	483	678	508	198	281
			678	305	400	555
6	126	559	793	305	410	565
			793	305	420	654
8	158	711	813	305	410	565
			813	305	420	654
10	200	864	988	457	440	688
			988	305	420	654
12	250	991	1141	305	420	654
			1156	457	440	688
14	280	1067	1249	610	690	
16	318	1194	1351	610	690	
18	360	1346	1535	610	690	
			1540	610	715	
20	406	1473	1726	610	690	
			1731	610	715	
22	450	1600	1921	610	690	
			1926	610	715	

BREN

High Temperature And High Pressure Gate Valve

Z61/561/961Y

Main External Dimensions

NPS/in	d	L	H	D0	L1	L2
Z960Y-CL2000 Z961Y-CL2000						
2 1/2	50	33	540	200	140	243
3	60	368	558	508	198	332
4	80	457	654	305	400	555
5	96	533	780	305	400	555
			780	305	410	565
6	118	610	830	305	410	565
8	148	762	960	305	410	565
			960	305	420	654
10	180	914	1020	305	420	654
			1024	457	440	688
12	222	1041	1150	457	440	688
			1166	610	690	
14	254	1118	1230	457	440	688
			1240	610	690	
16	294	1245	1330	610	690	
			1350	610	715	

High Temperature And High Pressure Gate Valve

Z61/561/961Y

Main External Dimensions

NPS/in	d	L	H	D0	L1	L2
Z960Y-CL2500 Z961Y-CL2500						
2 1/2	46	330	533	508	198	332
			533	200	140	243
3	54	368	549	508	198	332
			549	200	140	243
4	70	457	653	508	198	332
			644	305	410	565
5	86	533	760	305	400	555
			774	305	400	565
6	104	610	850	305	400	555
			861	305	410	565
8	130	762	847	305	410	565
			860	305	420	654
10	162	914	1021	305	420	654
			1050	610	690	
12	210	1041	1125	457	440	688
			1149	610	690	
14	234	1118	1221	610	690	
16	264	1245	1390	610	690	
			1395	610	715	
Z960Y-CL3500 Z961Y-CL3500						
3	44	440	620	508	198	332
			623	305	400	555
4	56	540	721	305	400	555
			730	305	410	565
5	74	616	796	305	410	565
			796	305	420	654
6	88	692	857	305	410	565
			857	305	420	654
8	116	846	1041	305	420	654
			1051	457	440	688
10	142	1000	1197	457	440	688
			1207	610	690	
12	174	1124	1338	610	690	
14	196	1219	1455	610	715	
			1440	610	690	
18	252	1499	1915	610	715	

API Globe Valve

J41H/W/Y



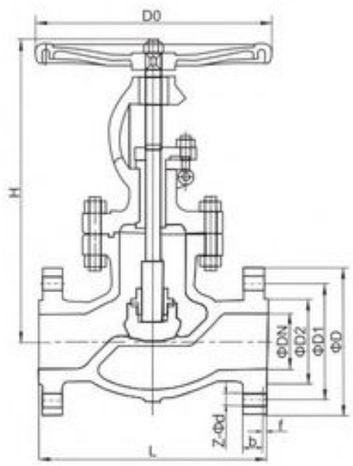

Main External Dimensions Unit: mm

DN	DN/in	L	D	D1	D2	f	b	z-Φd	H	D0
Class150										
15	1/2	108	90	60.3	35	2	8	4-Φ16	235	120
20	3/4	117	100	70	43	2	9	4-Φ16	241	120
25	1	127	110	79.4	51	2	9.6	4-Φ16	242	140
32	1 1/4	140	115	89	63.5	2	11.2	4-Φ16	280	160
40	1 1/2	165	125	98.4	73	2	12.7	4-Φ16	315	180
50	2	203	150	120.7	92	2	14.3	4-Φ19	350	220
65	2 1/2	216	180	139.7	105	2	15.9	4-Φ19	370	240
80	3	241	190	152.4	127	2	17.5	4-Φ19	385	280
100	4	292	230	190.5	157.2	2	22.3	8-Φ19	454	280
125	5	356	255	216	185.7	2	22.3	8-Φ22.5	472	350
150	6	406	280	241.3	216	2	23.9	8-Φ22.5	541	350
200	8	495	345	298.5	270	2	27	8-Φ22.5	590	450
250	10	622	405	362	324	2	28.6	12-Φ25.5	780	500
300	12	698	485	431.8	381	2	30.2	12-Φ25.5	870	550
350	14	787	535	476.3	413	2	33.4	12-Φ28.5	900	600
400	16	914	595	539.8	470	2	35	16-Φ28.5	1250	600
450	18	978	635	578	533.4	2	38.1	16-Φ32	1320	610
500	20	978	700	635	584.2	2	41.3	20-Φ32	1390	650
Class300										
15	1/2	152	95	66.7	35	2	12.7	4-Φ16	241	140
20	3/4	178	115	82.6	43	2	14.3	4-Φ19	241	140
25	1	203	125	89	50.8	2	15.9	4-Φ19	283	160
32	1 1/4	216	135	98.5	63.5	2	17.5	4-Φ19	320	200
40	1 1/2	229	155	114.3	73	2	19.1	4-Φ22.5	322	200
50	2	267	165	127	92.1	2	20.7	8-Φ19	345	240
65	2 1/2	292	190	149.2	104.8	2	23.9	8-Φ22.5	377	280
80	3	318	210	168.3	127	2	27	8-Φ22.5	464	280
100	4	356	255	200	157.2	2	30.2	8-Φ22.5	490	350
125	5	400	280	235	185.7	2	33.4	8-Φ22.5	614	400
150	6	444	320	270	216	2	35	12-Φ22.5	700	450
200	8	559	380	330.2	270	2	39.7	12-Φ25.5	777	500
250	10	622	445	387.4	323.8	2	46.1	16-Φ28.5	935	450
300	12	711	520	450.8	381	2	49.3	16-Φ32	997	500
350	14	838	585	514.4	412.8	2	52.4	20-Φ32	1058	600
400	16	864	650	571.5	470	2	55.6	20-Φ35	1320	600
450	18	978	710	628.6	533.4	2	58.8	24-Φ35	1420	700
500	20	1016	775	685.8	584.2	2	62.0	24-Φ35	1510	800

API Globe Valve

J541H/W/Y



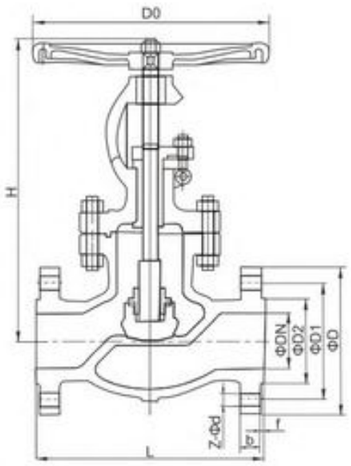

Main External Dimensions Unit: mm

DN	DN/in	L	D	D1	D2	f	b	z-Φd	H	D0
Class600										
15	1/2	165	95	66.7	35	7	14.3	4-Φ16	245	140
20	3/4	190	115	82.6	43	7	15.9	4-Φ19	245	180
25	1	216	125	89	50.8	7	17.5	4-Φ19	290	200
32	1 1/4	229	135	98.4	63.5	7	20.7	4-Φ19	325	200
40	1 1/2	241	155	114.3	73	7	22.3	4-Φ22.5	330	240
50	2	292	165	127	92.1	7	25.4	8-Φ19	345	280
65	2 1/2	330	190	149.2	104.8	7	28.6	8-Φ22.5	365	350
80	3	356	210	168.3	127	7	31.8	8-Φ22.5	465	350
100	4	432	275	216	157	7	38.1	8-Φ25.5	520	400
125	5	508	330	266.7	185.7	7	44.5	8-Φ28.5	635	550
150	6	559	355	292.1	216	7	47.7	12-Φ28.5	763	600
200	8	660	420	349.2	270	7	55.6	12-Φ32	845	700
250	10	787	510	431.8	323.8	7	63.5	16-Φ35	930	800
300	12	838	560	489	381	7	66.7	20-Φ35	1010	900
350	14	889	605	527	412.8	7	69.9	20-Φ38	1090	900
400	16	991	685	603.2	470	7	76.2	20-Φ41	1140	1000

BREN

API Globe Valve

J541H/W/Y

Main External Dimensions Unit: mm

DN	DN/in	L	D	D1	D2	f	b	z-Φd	H	D0
Class900										
50	2	368	215	165.1	92.1	7	38.1	8-Φ25.5	430	320
65	2 1/2	419	245	190.5	104.8	7	41.3	8-Φ28.5	530	320
80	3	381	240	190.5	127	7	38.1	8-Φ25.5	580	360
100	4	457	290	235	157.2	7	44.5	8-Φ32	690	450
125	5	559	350	279.4	185.7	7	50.8	8-Φ35	780	560
150	6	610	380	317.5	216	7	55.6	12-Φ32	890	630
200	8	737	470	393.7	270	7	63.5	12-Φ38	1240	720
250	10	838	545	470	323.8	7	69.9	16-Φ38	1651	760
Class1500										
50	2	368	215	165.1	92.1	7	38.1	8-Φ25.5	470	350
65	2 1/2	419	245	190.5	104.8	7	41.3	8-Φ28.5	530	400
80	3	470	265	203.2	127	7	47.7	8-Φ32	590	450
100	4	546	310	241.3	157.2	7	54	8-Φ35	710	500
125	5	673	375	292.1	185.7	7	73.1	8-Φ41	780	560
150	6	705	395	317.5	215.9	7	82.6	12-Φ38	904	630
200	8	832	485	393.7	270	7	92.1	12-Φ45	1140	560
Class2500										
50	2	451	235	171.4	92.1	7	50.9	8-Φ28.5	525	350
65	2 1/2	508	265	196.8	104.8	7	57.2	8-Φ32	740	400
80	3	578	305	228.6	127	7	66.7	8-Φ35	280	450
100	4	673	355	273	157.2	7	76.2	8-Φ41	860	560
125	5	794	420	323.8	185.7	7	92.1	8-Φ48	930	630
150	6	914	485	368.3	216	7	108	8-Φ54	1070	560
200	8	1022	550	438.2	270	7	127	12-Φ54	1180	630

High Pressure Globe Valve

J61/561/961Y



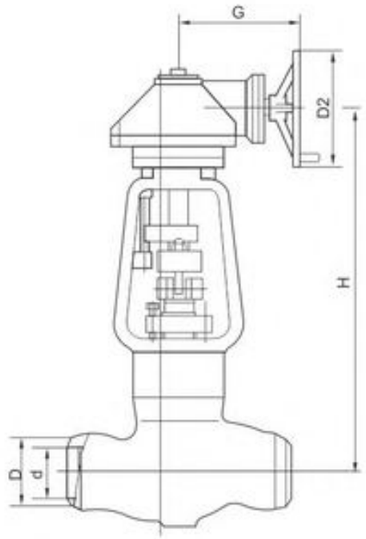

Main External Dimensions

Nominal Size (in)	d	L	H	D0
J61Y-CL1500				
2	48	216	810	350
2-1/2	57	254	960	450
3	70	305	1030	550
4	92	406	1090	600
5	111	483	1150	/
6	136	559	1290	/
8	178	711	1420	/
10	222	864	1650	/
12	263	991	1825	/
14	289	1067	1990	/
16	330	1194	2150	/

BREN

High Pressure Globe Valve

J61/561/961Y

Main External Dimensions

Nominal Size (in)	d	L	H	D0
J61Y-CL2000 J61Y-CL2500				
2	38	279	860	350
2-1/2	48	330	1010	450
3	57	368	1080	550
4	73	457	1140	600
5	92	533	1200	/
6	111	610	1340	/
8	146	762	1470	/
10	184	914	1700	/
12	219	1041	1875	/
J61Y-CL3500				
2-1/2	38	480	1030	450
3	48	640	1100	550
4	60	762	1170	600
5	74	864	1250	/
6	88	965	1380	/

API Swing Check Valve

H44H/W/Y



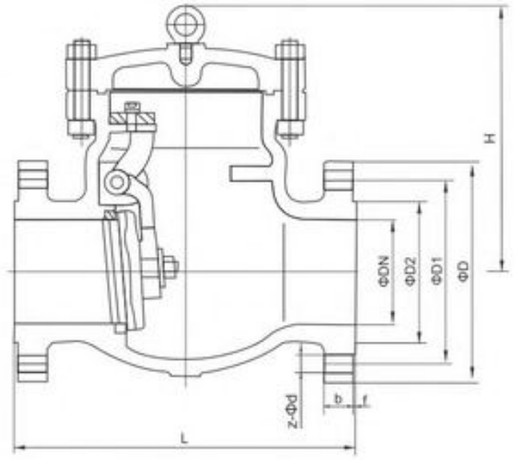

Main External Dimensions Unit: mm

DN	DN/in	L	D	D1	D2	f	b	z-Φd	H
Class150									
40	1 1/2	165	125	98.4	73	2	12.7	4-Φ16	154
50	2	203	150	120.7	92.1	2	14.3	4-Φ19	144
65	2 1/2	216	180	139.7	104.8	2	15.9	4-Φ19	150
80	3	241	190	152.4	127	2	17.5	4-Φ19	210
100	4	292	230	190.5	157.2	2	22.3	8-Φ19	217
125	5	330	255	215.9	185.7	2	22.3	8-Φ22.5	235
150	6	356	280	241.3	216	2	23.9	8-Φ22.5	305
200	8	495	345	298.5	270	2	27	8-Φ22.5	370
250	10	622	405	362.0	323.8	2	28.6	12-Φ25.5	417
300	12	698	485	431.8	381	2	30.2	12-Φ25.5	478
350	14	787	535	476.3	412.8	2	33.4	12-Φ28.5	540
400	16	864	595	539.8	470	2	35	16-Φ28.5	620
450	18	978	635	577.9	533.4	2	38.1	16-Φ32	685
500	20	978	700	635.0	584.2	2	41.3	20-Φ32	720
600	24	1295	815	749.3	692.2	2	46.1	20-Φ35	880
650	26	1295	870	806.4	749	2	66.7	24-Φ35	910
700	28	1448	925	863.6	800	2	69.9	28-Φ35	1000
750	30	1524	985	914.4	857	2	73.1	28-Φ35	1050

BREN

API Swing Check Valve

H44H/W/Y

Main External Dimensions Unit: mm

DN	DN/in	L	D	D1	D2	f	b	z-Φd	H
Class300									
40	1 1/2	241	155	114.3	73	2	19.1	4-Φ22.5	165
50	2	267	165	127.0	92.1	2	20.7	8-Φ19	170
65	2 1/2	292	190	149.2	104.8	2	23.9	8-Φ22.5	190
80	3	318	210	168.3	127	2	27	8-Φ22.5	216
100	4	356	255	200.0	157.2	2	30.2	8-Φ22.5	260
125	5	400	280	235.0	185.7	2	33.4	8-Φ22.5	280
150	6	444	320	269.9	216	2	35	12-Φ22.5	305
200	8	533	380	330.2	270	2	39.7	12-Φ25.5	368
250	10	622	445	387.4	323.8	2	46.1	16-Φ28.5	410
300	12	711	520	450.8	381	2	49.3	16-Φ32	445
350	14	838	585	514.4	412.8	2	52.4	20-Φ32	570
400	16	864	650	571.5	470	2	55.6	20-Φ35	630
450	18	978	710	628.6	533.4	2	58.8	24-Φ35	676
500	20	1016	775	685.8	584.2	2	62	24-Φ35	740
600	24	1346	915	812.8	692.2	2	68.3	24-Φ41	900
650	26	1346	970	876.3	749	2	77.8	28-Φ44.5	930
700	28	1499	1035	939.8	800	2	84.2	28-Φ44.5	1163
750	30	1594	1090	997.0	857	2	90.5	28-Φ48	1270
Class600									
40	1 1/2	241	155	114.3	73	7	22.3	4-Φ22.5	165
50	2	292	165	127.0	92.1	7	25.4	8-Φ19	170
65	2 1/2	330	190	149.2	104.8	7	28.6	8-Φ22.5	190
80	3	356	210	168.3	127	7	31.8	8-Φ22.5	216
100	4	432	275	215.9	157.2	7	38.1	8-Φ25.5	260
125	5	508	330	266.7	185.7	7	44.5	8-Φ29	280
150	6	559	355	292.1	216	7	47.7	12-Φ29	305
200	8	660	420	349.2	270	7	55.6	12-Φ32	368
250	10	787	510	431.8	323.8	7	63.5	16-Φ35	410
300	12	838	560	489	381	7	66.7	20-Φ35	445
350	14	889	605	527	412.8	7	69.9	20-Φ38	570
400	16	991	685	603.2	470	7	76.2	20-Φ41	630
450	18	1092	745	654	533.4	7	82.6	20-Φ44	676
500	20	1194	815	723.9	584.2	7	88.9	24-Φ44	740
600	24	1397	940	838.2	692.2	7	101.6	24-Φ51	900

API Swing Check Valve

H44H/W/Y

Main External Dimensions Unit: mm

DN	DN/in	L	D	D1	D2	f	b	z-Φd	H
Class900									
50	2	368	215	165.1	92.1	7	38.1	8-Φ25.5	216
65	2 1/2	419	245	190.5	104.8	7	41.3	8-Φ28.5	254
80	3	381	240	190.5	127	7	38.1	8-Φ25.5	292
100	4	457	290	235.0	157.2	7	44.5	8-Φ32	318
125	5	559	350	279.4	185.7	7	50.8	8-Φ35	344
150	6	610	380	317.5	215.9	7	55.6	12-Φ32	400
200	8	737	470	393.7	269.9	7	63.5	12-Φ38	432
250	10	838	545	469.9	323.8	7	70	16-Φ38	546
300	12	965	610	533.4	381	7	79.4	20-Φ38	660
350	14	1029	640	558.8	412.8	7	85.8	20-Φ41	782
400	16	1130	705	616	469.9	7	90	20-Φ44.5	820
Class1500									
65	2 1/2	419	245	190.5	104.8	7	41.3	8-Φ28.5	250
80	3	470	265	203.2	127	7	47.7	8-Φ32	285
100	4	546	310	241.3	157.2	7	54.0	8-Φ35	355
125	5	673	375	292.1	185.7	7	73.1	8-Φ42	410
150	6	705	395	317.5	215.9	7	82.6	12-Φ38	470
200	8	832	485	393.7	269.9	7	92.1	12-Φ45	560
250	10	991	585	482.6	323.8	7	108.0	12-Φ51	675
300	12	1130	675	571.5	381	7	124	16-Φ54	857
350	14	1257	750	635	412.8	7	133.4	16-Φ61	950
400	16	1384	825	704.8	469.9	7	146.1	16-Φ67	1100
Class2500									
65	2 1/2	508	265	196.8	104.8	7	57.2	8-Φ32	285
80	3	578	305	228.6	127	7	66.7	8-Φ35	380
100	4	673	355	273.0	157.2	7	76.2	8-Φ41	435
125	5	794	420	323.8	185.7	7	92.1	8-Φ48	485
150	6	914	485	368.3	215.9	7	108	8-Φ54	540
200	8	1022	550	438.2	269.9	7	127	12-Φ54	784
250	10	1270	675	539.9	323.8	7	165.1	12-Φ67	975
300	12	1422	760	619	381	7	184.2	12-Φ73	1150

BREN

High Temperature And High Pressure Check Valve

H64Y



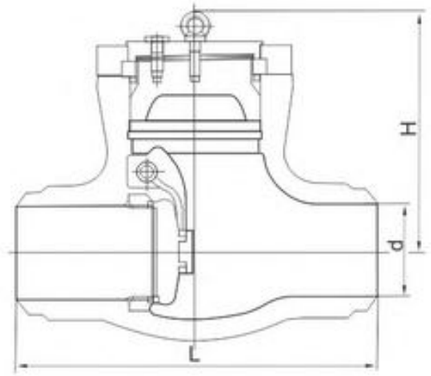

Main External Dimensions

DN(mm)	d	L	H
H64Y-CL1500			
2 1/2	56	254	282
3	64	305	300
4	84	406	350
5	100	483	425
6	126	559	400
8	158	711	490
10	200	864	540
12	250	991	650
14	280	1067	710
H64Y-CL2000			
2 1/2	50	330	240
3	60	368	305
4	80	457	315
5	96	533	409
6	118	610	465
8	147	762	528
10	180	914	613
12	222	1041	680
14	254	1118	745
H64Y-CL2500			
3	54	368	297
4	70	457	385
5	86	533	410
6	104	610	455
8	130	762	557
10	162	914	615
12	210	1041	715
14	234	1118	790
16	264	1245	815
18	304	1397	815

API Wafer Type Dual Disc Swing Check Valve



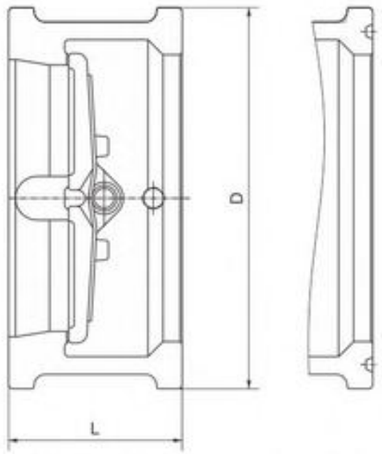

Class150,300

Class600,900

Main External Dimensions

Model		H76H (W.Y) -150Lb (C.P.R.S.L)													
Pressure rate		150													
Size	mm	50	65	80	100	125	150	200	250	300	350	400	450	500	600
	in	2	2 1/2	3	4	5	6	8	10	12	14	16	18	20	24
L (mm)		60	67	73	73	86	98	127	146	181	184	191	203	219	222
D (mm)		103	122	135	173	196	222	279	339	409	450	514	549	606	717
Weight (Kg)		2	3.2	4	6	9	12	22	38	54	80	118	210	240	410

Model		H76H (W.Y) -300Lb (C.P.R.S.L)										
Pressure rate		300										
Size	mm	50	65	80	100	125	150	200	250	300	350	400
	in	2	2 1/2	3	4	5	6	8	10	12	14	16
L (mm)		60	67	73	73	86	98	127	146	181	222	232
D (mm)		110	129	148	180	215	250	307	361	422	485	539
Weight (Kg)		3.5	5	7	10	18.5	19	33	54	88	128	169

Model		H76H (W.Y) -600Lb (C.P.R.S.L)											H76H (W.Y) -900Lb (C.P.R.S.L)					
Pressure rate		600											900					
Size	mm	50	65	80	100	125	150	200	250	300	350	400	50	65	80	100	150	200
	in	2	2 1/2	3	4	5	6	8	10	12	14	16	2	2 1/2	3	4	6	8
L (mm)		60	67	73	79	105	136	165	213	229	273	305	70	83	83	102	159	206
D (mm)		110	129	148	192	240	265	319	399	456	489	562	142	164	167	205	288	358
Weight (Kg)		3.5	5	7	12	22.5	35	45	77	110	135	163	6.5	9	14	24	43	56

More specifications, please contact our company

API Wafer Type Piston-lift Check Valve



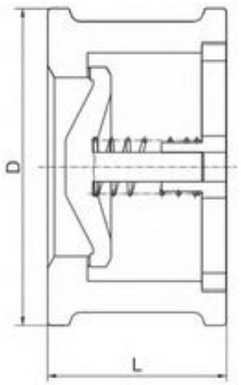

Class 150/RF

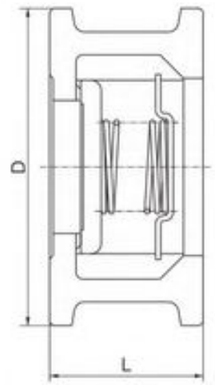

Class 300/RF
Class 600,900/RTJ

Main External Dimensions

Model		H71H (W.Y) -150Lb(C.P.R.S.L)											H71H (W.Y) -300Lb(C.P.R.S.L)										
Pressure rate		150											300										
Size	mm	15	20	25	32	40	50	65	80	100	125	150	15	20	25	32	40	50	65	80	100	125	150
	In	1/2	3/4	1	1 1/4	1 1/2	2	2 1/2	3	4	5	6	1/2	3/4	1	1 1/4	1 1/2	2	2 1/2	3	4	5	6
L (mm)		16	19	22	28	31.5	40	46	50	60	90	106	25	31.5	35.5	40	45	56	63	71	80	110	125
D (mm)		47	57	66	75	85	103	122	135	173	196	222	53	65	72	81	95	110	129	148	180	215	250
Weight (Kg)		-	-	-	-	-	2.5	3.5	4.4	6.5	10	12	-	-	-	-	-	3	4.2	5.3	7.8	12	13.2

Model		H71H (W.Y) -600Lb(C.P.R.S.L)											H71H (W.Y) -900Lb(C.P.R.S.L)										
Pressure rate		600											900										
Size	mm	15	20	25	32	40	50	65	80	100	125	150	15	20	25	32	40	50	65	80	100	125	150
	In	1/2	3/4	1	1 1/4	1 1/2	2	2 1/2	3	4	5	6	1/2	3/4	1	1 1/4	1 1/2	2	2 1/2	3	4	5	6
L (mm)		25	31.5	35.5	40	45	56	63	71	80	110	125	25	31.5	35.5	40	45	56	63	71	80	110	125
D (mm)		53	65	72	81	95	110	129	148	192	240	265	63	69	78	88	98	142	164	167	205	247	288
Weight (Kg)		-	-	-	-	-	3	4.0	6.0	10	17	22	-	-	-	-	-	3.5	4.0	8.0	13	20	25

More specifications, please contact our company

API Axial Flow Type Check Valve



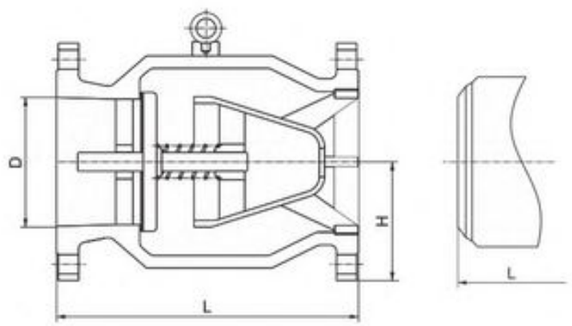

Main External Dimensions

Size		D	L-BW	L-RF	L-RTJ	H
In	mm					
PN2.0MPa(Class150)						
2	50	49	203	203	216	102
3	80	74	241	241	254	128
4	100	100	292	292	305	160
6	150	150	356	356	368	200
8	200	201	495	495	508	255
10	250	252	622	622	635	308
12	300	303	699	699	711	348
14	350	334	787	787	800	360
16	400	385	864	864	876	410
18	450	436	978	978	991	430
20	500	487	978	978	991	492
22	550	538	1067	1067	1080	505
24	600	589	1295	1295	1308	570
26	650	633	1295	1295	1308	618
28	700	684	1448	1448	1461	692
30	750	735	1524	1524	1357	800
32	800	779	1778	1778	1794	804
34	850	830	1930	1930	1946	817
36	900	874	1965	1965	1981	945
40	1000	976	2159	2159	2175	980
42	1050	1020	2261	2261	2277	1110
48	1200	1166	2566	2566	2582	1265

More specifications, please contact our company

API Stainless Steel Y-strainer



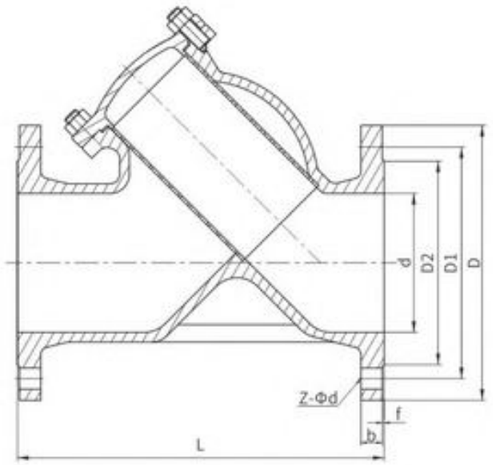

Main External Dimensions Unit: mm

NPS	L	d	D	D1	D2	D6	b-f	f2	Z-Φd
Class 150									
1/2	166	15	90	60.3	34.9	/	8-2	/	4-16
3/4	188	20	100	69.9	42.9	/	8.9-2	/	4-16
1	188	25	110	79.4	50.8	/	9.6-2	/	4-16
1-1/4	178	32	115	88.9	63.5	/	11.2-2	/	4-16
1-1/2	181	40	125	98.4	73	/	12.7-2	/	4-16
2	200	50	150	120.7	92.1	/	14.3-2	/	4-19
2-1/2	248	63	180	139.7	104.8	/	15.9-2	/	4-19
3	256	76	190	152.4	127	/	17.5-2	/	4-19
4	308	100	230	190.5	157.2	/	22.3-2	/	8-19
6	470	150	280	241.3	215.9	/	23.9-2	/	8-22
8	543	200	345	298.5	269.9	/	27-2	/	8-22
10	661	250	405	362	323.8	/	28.6-2	/	12-25
12	759	300	485	431.8	381	/	30.2-2	/	12-25

API Stainless Steel Y-strainer

Main External Dimensions Unit: mm

NPS	L	d	D	D1	D2	D6	b-f	f2	Z-Φd
Class 300									
1/2	169	15	95	66.7	34.9	/	12.7-2	/	4-16
3/4	212	20	115	82.6	42.9	/	14.3-2	/	4-19
1	212	25	125	88.9	50.8	/	15.9-2	/	4-19
1-1/4	258	32	135	98.4	63.5	/	17.5-2	/	4-19
1-1/2	261	40	155	114.3	73	/	19.1-2	/	4-22
2	245	50	165	127	92.1	/	20.7-2	/	8-19
2-1/2	270	63	190	149.2	104.8	/	23.9-2	/	8-22.5
3	305	76	210	168.3	127	/	27-2	/	8-22.5
4	369	100	255	200	157.2	/	30.2-2	/	8-22.5
6	491	150	320	269.9	215.9	/	35-2	/	12-22.5
8	594	200	380	330.2	269.9	/	39.7-2	/	12-25.5
10	696	250	445	387.4	323.8	/	46.1-2	/	16-29

API Basket Strainer



Straight Through Flat Bottom Basket Filter

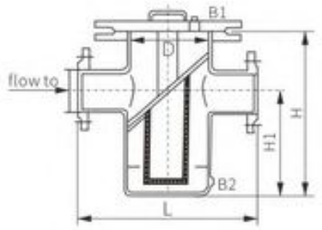

Straight Through Flat Bottom Basket Filter

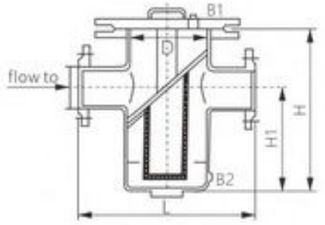

Straight Through Arc Low Basket Filter

Main Dimensions Of Basket Filter

DN/NPS	L	D	H	H1	Outfall
DN15(1/2")	180	76	260	160	Handle, Plugeither-or
DN20(3/4")	180	76	260	160	
DN25(1")	185	76	260	160	
DN32(1-1/4")	200	76	270	160	
DN40(1-1/2")	260	108	300	170	ZG1/2"
DN50(2")	260	108	300	170	
DN65(2-1/2")	330	140	360	240	
DN80(3")	340	159	400	250	
DN100(4")	400	219	470	300	
DN125(5")	480	273	550	360	ZG3/4"
DN150(6")	500	273	630	420	
DN200(8")	560	325	780	530	
DN250(10")	660	426	930	640	
DN300(12")	750	457	1200	840	
DN350(14")	810	508	1370	920	
DN400(16")	900	559	1500	950	
DN450(18")	1000	630	1700	1000	ZG1"
DN500(20")	1080	720	1910	1050	
DN600(24")	1180	820	1800	1200	
DN700(28")	1400	920	2100	1360	
DN800(32")	1400	1020	2200	1500	

API Triple Offset Butterfly Valve

Wafer



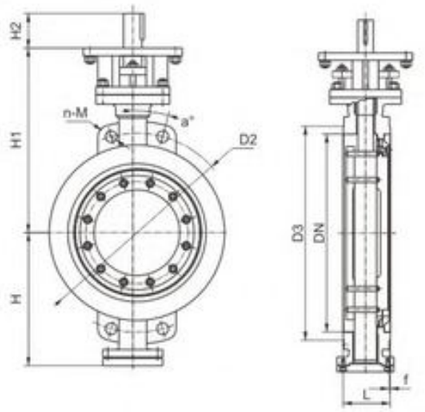

Main External Dimensions Unit: mm

DN in(mm)	L	D2	D3	f	a°	n-M	ISO5211	Nm	Weight	CV	H	H1	H2
Class 150													
2"	43	120.7	92.1	/	/	/	F07	26	5	58	65	160	40
2.5"	46	139.7	104.8	/	/	/	F07	32	6	109	85	167	40
3"	48	152.4	127	/	/	/	F07	80	10	165	85	197	40
4"	54	190.5	157.2	/	/	/	F07	142	11	318	107	204	40
5"	57	215.9	185.7	/	/	/	F10	264	15	648	138	237	50
6"	57	241.3	215.9	/	/	/	F10	362	21	932	147	272	60
8"	64	298.5	269.9	/	/	/	F12	785	32	1970	185	307	60
10"	71	362	323.8	/	/	/	F14	1080	45	2689	215	354	60
12"	81	431.8	381	2	15	4-7/8-9UNC	F14	1510	80	3930	252	395	60
14"	92	476.3	412.8	2	15	4-1-8UNC	F16	2458	90	5290	287	445	80
16"	102	539.8	469.9	2	11.25	4-1-8UNC	F25	2850	110	7726	317	490	90
18"	114	577.9	533.4	2	11.25	4-1 1/8-8UN	F25	4536	170	9856	342	507	90
20"	127	635	584.2	2	9	4-1 1/8-8UN	F25	6200	190	12180	372	575	90
22"	154	692.2	641.4	2	9	4-1 1/4-8UN	F25	7300	250	15625	409	575	120
24"	154	749.3	692.2	2	9	4-1 1/4-8UN	F25	8240	290	19800	439	605	120
26"	165	744.5	711	2	5	8-3/4-10UNC	F30	10380	312	23850	510	645	120
28"	165	795.3	762	2	4.5	8-3/4-10UNC	F30	11682	392	27600	536	680	120
30"	190	846.1	813	2	4.09	8-3/4-10UNC	F30	14340	472	33700	580	710	150
32"	190	900.1	864	2	3.75	8-3/4-10UNC	F30	17856	528	35800	581	705	150
34"	203	957.3	921	2	4.5	8-7/8-9UNC	F30	23345	588	40400	636	825	150
36"	203	1009.6	972	2	4.09	8-7/8-9UNC	F30	27200	648	45600	675	850	150
38"	203	1070	1022	2	4.5	8-1-8UNC	F35	31000	784	50560	675	855	150
40"	216	1120.8	1080	2	4.09	8-1-8UNC	F35	32000	926.4	56000	725	885	150
42"	216	1171.6	1130	2	3.75	8-1-8UNC	F35	34000	960	61800	777	952	180
44"	254	1222.4	1181	2	3.461	8-1-8UNC	F35	36000	1000	67800	786	965	180
48"	254	1335.1	1289	2	3.75	8-1 1/8-8UN	F40	45400	1496.8	82500	847	1020	180
52"	279	1436.7	1391	2	3.461	8-1 1/8-8UN	F40	56000	1600	104336	896	1080	180
56"	279	1543	1492	2	3	8-1 1/8-8UN	F40	70500	2000	121000	980	1205	200
60"	318	1662.1	1600	2	3.461	8-1 1/4-8UN	F40	86000	2500	160380	995	1225	200

More specifications, please contact our company

BREN

API Triple Offset Butterfly Valve

Wafer

Main External Dimensions Unit: mm

DN in(mm)	L	D2	D3	f	a°	n-M	ISO5211	Nm	Weight	CV	H	H1	H2
Class 300													
2"	43	127	92.1	/	/	/	F07	78	6	58	65	160	40
2.5"	46	149.2	104.8	/	/	/	F07	88	7	109	85	167	40
3"	48	168.3	127	/	/	/	F07	144	11	165	100	207	40
4"	54	200	157.2	/	/	/	F07	258	13	318	120	222	45
5"	59	235	185.7	2	22.5	4-3/4-10UNC	F10	412	21	648	165	272	60
6"	59	269.9	215.9	2	15	4-3/4-10UNC	F12	798	24	682	185	292	60
8"	73	330.2	269.9	2	15	4-7/8-9UNC	F14	1960	36	1230	215	345	80
10"	83	387.4	323.8	2	11.25	4-1-8UNC	F16	2270	57.6	2370	252	400	80
12"	92	450.8	381	2	11.25	4-1 1/8-8UN	F16	2780	80	3520	282	440	85
14"	117	514.4	412.8	2	9	4-1 1/8-8UN	F25	5680	110	4782	330	485	90
16"	133	571.5	469.9	2	9	4-1 1/4-8UN	F25	7800	160	6280	365	510	90
18"	149	628.6	533.4	2	7.5	4-1 1/4-8UN	F25	8956	240	7980	405	550	120
20"	159	685.8	584.2	2	7.5	4-1 1/4-8UN	F30	11518	300	10800	435	580	120
22"	181	743	641.4	2	7.5	4-1 1/2-8UN	F30	15800	350	13030	480	610	150
24"	181	812.8	692.2	2	7.5	4-1 1/2-8UN	F30	18393	400	16180	515	645	150
26"	229	803.3	737	2	5.625	8-1 1/4-8UN	F35	24000	500	19327	575	700	150
28"	229	857.2	787	2	5	8-1 1/4-8UN	F35	27478	656	22410	600	725	180
30"	229	920.8	845	2	5	8-1 3/8-8UN	F35	38971	800	27090	635	765	180
32"	241	977.9	902	2	5.625	8-1 1/2-8UN	F40	41150	928	33050	665	855	180
34"	241	1031.9	953	2	5	8-1 1/2-8UN	F40	48200	1000	37320	686	880	180
36"	241	1089	1010	2	5.625	8-1 5/8-8UN	F40	53700	1148	42090	712	920	180
38"	241	1139.8	1060	2	5	8-1 5/8-8UN	F40	63000	1280	47000	764	950	200
40"	300	1190.6	1114	2	4.5	8-1 5/8-8UN	F40	68370	1420	48964	784	980	200
42"	300	1244.6	1168	2	5	8-1 3/4-8UN	F40	75400	1560	53700	809	985	200
44"	300	1295.4	1219	2	4.5	8-1 3/4-8UN	F40	82650	1800	62500	839	1010	200
48"	360	1416	1327	2	4.5	8-1 7/8-8UN	F48	108000	2120	69350	916	1090	250
Class 600													
2"	54	127	92.1	7	22.5	4-5/8-11UNC	F07	162	7	42	82.5	190	40
2.5"	54	149.2	104.8	7	22.5	4-3/4-10UNC	F07	208	9	72	95	210	40
3"	54	168.3	127	7	22.5	4-3/4-10UNC	F10	340	13	107	100	227	40
4"	64	215.9	157.2	7	22.5	4-7/8-9UNC	F12	633	42	250	120	242	60
5"	78	266.7	185.7	7	22.5	4-1-8UNC	F12	960	45	416	188	282	60
6"	78	292.1	215.9	7	15	4-1-8UNC	F16	1630	50	600	210	345	60
8"	102	349.2	269.9	7	15	4-1 1/8-8UN	F16	3540	60	1079	245	380	80
10"	117	431.8	323.8	7	11.25	4-1 1/4-8UN	F25	5462	105	1708	287	440	90
12"	140	489	381	7	9	4-1 1/4-8UN	F25	6018	150	2620	315	475	90
14"	155	527	412.8	7	9	4-1 3/8-8UN	F25	10913	220	4062	357	510	120
16"	178	603.2	469.9	7	9	4-1 1/2-8UN	F30	15757	348.8	5292	401	570	150
18"	200	654	533.4	7	9	4-1 5/8-8UN	F35	19805	509.6	7395	437	615	150
20"	216	723.9	584.2	7	7.5	8-1 5/8-8UN	F35	25808	608	9320	543	670	150
22"	232	777.7	641.4	7	7.5	8-1 3/4-8UN	F40	40258	650	12260	560	705	180
24"	232	838.2	692.2	7	7.5	8-1 7/8-8UN	F40	44799	710.4	13578	597	735	180

More specifications, please contact our company

API Triple Offset Butterfly Valve

Lug



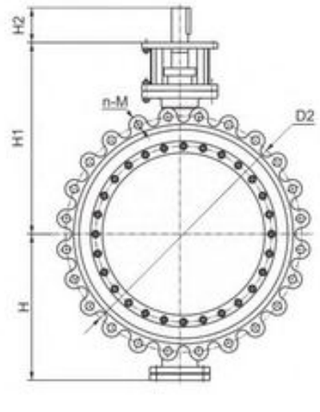

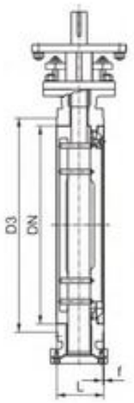

Main External Dimensions Unit: mm

DN in(mm)	L	D2	D3	f	n-M	ISO5211	Nm	Weight	CV	H	H1	H2
Class 150												
2"	43	120.7	92.1	2	4-5/8-11UNC	F07	26	5	58	65	160	40
2.5"	46	139.7	104.8	2	4-5/8-11UNC	F07	32	6	109	85	167	40
3"	48	152.4	127	2	4-5/8-11UNC	F07	80	8	165	85	197	40
4"	54	190.5	157.2	2	8-5/8-11UNC	F07	142	12	318	107	204	40
5"	57	215.9	185.7	2	8-3/4-10UNC	F10	264	20	648	138	237	50
6"	57	241.3	215.9	2	8-3/4-10UNC	F10	362	25	932	147	272	60
8"	64	298.5	269.9	2	8-3/4-10UNC	F12	785	36	1970	185	307	60
10"	71	362	323.8	2	12-7/8-9UNC	F14	1080	60	2689	215	355	60
12"	81	431.8	381	2	12-7/8-9UNC	F14	1510	80	3930	252	395	60
14"	92	476.3	412.8	2	12-1-8UNC	F16	2458	120	5290	287	445	80
16"	102	539.8	469.9	2	16-1-8UNC	F25	2850	140.8	7726	317	490	90
18"	114	577.9	533.4	2	16-1 1/8-8UN	F25	4536	180	9856	342	507	90
20"	127	635	584.2	2	20-1 1/8-8UN	F25	6200	220	12180	372	535	90
22"	154	692.2	641.4	2	20-1 1/4-8UN	F25	7300	250	15625	409	575	120
24"	154	749.3	692.2	2	20-1 1/4-8UN	F25	8240	300	19800	439	605	120
26"	165	744.5	711	2	36-3/4-10UNC	F30	10380	400	23850	510	645	120
28"	165	795.3	762	2	40-3/4-10UNC	F30	11682	456	27600	536	680	120
30"	190	846.1	813	2	44-3/4-10UNC	F30	14340	512	33700	580	710	150
32"	190	900.1	864	2	48-3/4-10UNC	F30	17856	560	35800	581	705	150
34"	203	957.3	921	2	40-7/8-9UNC	F30	23345	620	40400	636	825	150
36"	203	1009.6	972	2	44-7/8-9UNC	F30	27200	680	45600	675	850	150
38"	203	1070	1022	2	40-1-8UNC	F35	31000	850	50560	675	855	150
40"	216	1120.8	1080	2	44-1-8UNC	F35	32000	1000	56000	725	885	150
42"	216	1171.6	1130	2	48-1-8UNC	F35	34000	1136	61800	777	952	180
44"	254	1222.4	1181	2	52-1-8UNC	F35	36000	1200	67800	786	965	180
48"	254	1335.1	1289	2	44-1 1/8-8UN	F40	45400	1337.6	82500	847	1020	180

More specifications, please contact our company

BREN

API Triple Offset Butterfly Valve

Lug

Main External Dimensions Unit: mm

DN in(mm)	L	D2	D3	f	n-M	ISO5211	Nm	Weight	CV	H	H1	H2
Class 300												
2"	43	127	92.1	2	8-5/8-11UNC	F07	78	7	58	65	160	40
2.5"	46	149.2	104.8	2	8-3/4-10UNC	F07	88	9	109	85	167	40
3"	48	168.3	127	2	8-3/4-10UNC	F07	144	13	165	85	182	40
4"	54	200	157.2	2	8-3/4-10UNC	F07	258	18	318	100	204	45
5"	59	235	185.7	2	8-3/4-10UNC	F10	412	25	648	165	272	60
6"	59	269.9	215.9	2	12-3/4-10UNC	F12	798	32	682	185	292	60
8"	73	330.2	269.9	2	12-7/8-9UNC	F14	1960	51.2	1230	215	345	80
10"	83	387.4	323.8	2	16-1-8UNC	F16	2270	80	2370	252	400	80
12"	92	450.8	381	2	16-1 1/8-8UN	F16	2780	125.6	3520	282	440	85
14"	117	514.4	412.8	2	20-1 1/8-8UN	F25	5680	204	4782	330	485	90
16"	133	571.5	469.9	2	20-1 1/4-8UN	F25	7800	276.8	6280	365	510	90
18"	149	628.6	533.4	2	24-1 1/4-8UN	F25	8956	360	7980	405	550	120
20"	159	685.8	584.2	2	24-1 1/4-8UN	F30	11518	460	10800	435	580	120
22"	181	743	641.4	2	24-1 1/2-8UN	F30	15800	550	13030	480	610	150
24"	181	812.8	692.2	2	24-1 1/2-8UN	F30	18393	630	16180	520	640	150
26"	229	803.3	737	2	32-1 1/4-8UN	F35	24000	630	19327	575	700	150
28"	229	857.2	787	2	36-1 1/4-8UN	F35	27478	800	22410	600	725	180
30"	229	920.8	845	2	36-1 3/8-8UN	F35	38971	960	27090	640	765	180
32"	241	977.9	902	2	32-1 1/2-8UN	F40	41150	1224	33050	665	855	180
34"	241	1031.9	953	2	36-1 1/2-8UN	F40	48200	1280	37320	686	880	180
36"	241	1089	1010	2	32-1 5/8-8UN	F40	53700	1336	42090	712	920	180
38"	241	1139.8	1060	2	36-1 5/8-8UN	F40	63000	1580	47000	764	950	200
40"	300	1190.6	1114	2	40-1 5/8-8UN	F40	68370	1832	48964	784	980	200
42"	300	1244.6	1168	2	36-1 3/4-8UN	F40	75400	2137.6	53700	809	985	200
44"	300	1295.4	1219	2	40-1 3/4-8UN	F40	82650	2500	62500	839	1010	200
48"	360	1416	1327	2	40-1 7/8-8UN	F48	108000	2880	69350	916	1090	250
Class 600												
2"	54	127	92.1	7	8-5/8-11UNC	F07	162	9	42	82.5	190	40
2.5"	54	149.2	104.8	7	8-3/4-10UNC	F07	208	13	72	95	210	40
3"	54	168.3	127	7	8-3/4-10UNC	F10	340	17	107	100	227	40
4"	64	215.9	157.2	7	8-7/8-9UNC	F12	633	25	250	120	242	60
5"	78	266.7	185.7	7	8-1-8UNC	F12	960	43	416	188	282	60
6"	78	292.1	215.9	7	12-1-8UNC	F16	1630	62	600	210	345	60
8"	102	349.2	269.9	7	12-1 1/8-8UN	F16	3540	100	1079	245	380	80
10"	117	431.8	323.8	7	16-1 1/4-8UN	F25	5462	140	1708	287	440	90
12"	140	489	381	7	20-1 1/4-8UN	F25	6018	210	2620	315	475	90
14"	155	527	412.8	7	20-1 3/8-8UN	F25	10913	350	4062	357	510	120
16"	178	603.2	469.9	7	20-1 1/2-8UN	F30	15757	530	5292	401	570	150
18"	200	654	533.4	7	20-1 5/8-8UN	F35	19805	720	7395	437	615	150
20"	216	723.9	584.2	7	24-1 5/8-8UN	F35	25808	890	9320	543	670	150
22"	232	777.7	641.4	7	24-1 3/4-8UN	F40	40258	1000	12260	560	705	180
24"	232	838.2	692.2	7	24-1 7/8-8UN	F40	44799	1280	13578	597	735	180

More specifications, please contact our company

API Triple Offset Butterfly Valve

Double Flange



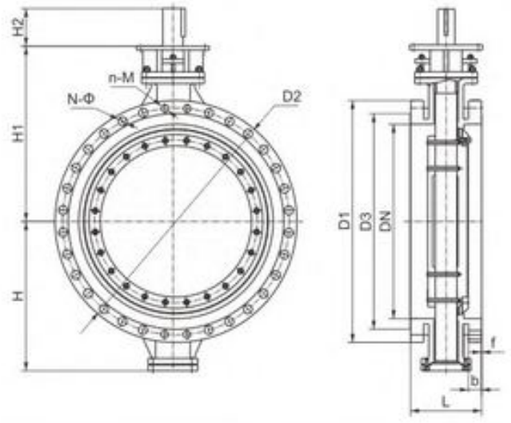

Main External Dimensions Unit: mm

DN in(mm)	L	D1	D2	D3	n-Φ	n-M	b	f	ISO5211	Nm	Weight	CV	H	H1	H2
Class 150															
2"	108	150	120.7	92.1	4-Φ19.1	/	19.5	2	F07	26	10	58	75	160	40
2.5"	112	180	139.7	104.8	4-Φ19.1	/	22.7	2	F07	32	14	109	90	172	40
3"	114	190	152.4	127	4-Φ19.1	/	24.3	2	F07	80	17	165	95	197	40
4"	127	230	190.5	157.2	8-Φ19.1	/	24.3	2	F07	142	23	318	115	204	40
5"	140	255	215.9	185.7	8-Φ22.2	/	24.3	2	F10	264	32	648	138	260	50
6"	140	280	241.3	215.9	8-Φ22.2	/	25.9	2	F10	362	41	932	147	272	60
8"	152	345	298.5	269.9	8-Φ22.2	/	29	2	F12	785	50	1970	185	307	60
10"	165	405	362	323.8	8-Φ25.4	4-7/8-9UNC	30.6	2	F14	1080	74	2689	215	355	60
12"	178	485	431.8	381	8-Φ25.4	4-7/8-9UNC	32.2	2	F14	1510	120	3930	252	395	60
14"	190	535	476.3	412.8	8-Φ28.6	4-1-8UNC	35.4	2	F16	2458	146	5290	287	440	80
16"	216	595	539.8	469.9	12-Φ28.6	4-1-8UNC	37	2	F25	2850	200	7726	317	490	90
18"	222	635	577.9	533.4	12-Φ31.8	4-1 1/8-8UN	40.1	2	F25	4536	236	9856	342	507	90
20"	229	700	635	584.2	16-Φ31.8	4-1 1/8-8UN	43.3	2	F25	6200	300	12180	372	535	90
22"	267	750	692.2	641.4	16-Φ34.9	4-1 1/4-8UN	46.5	2	F25	7300	400	15625	409	575	120
24"	267	815	749.3	692.2	16-Φ34.9	4-1 1/4-8UN	48.1	2	F25	8240	460	19800	439	605	120
26"	292	785	744.5	711	36-Φ22.2	/	41.8	2	F30	10380	460	23850	510	645	120
28"	292	835	795.3	762	40-Φ22.2	/	45	2	F30	11682	500	27600	536	680	120
30"	318	885	846.1	813	44-Φ22.2	/	45	2	F30	14340	570	33700	580	710	150
32"	318	940	900.1	864	48-Φ22.2	/	46.6	2	F30	17856	620	35800	581	705	150
34"	330	1005	957.3	921	40-Φ25.4	/	49.7	2	F30	23345	750	40400	636	825	150
36"	330	1055	1009.6	972	44-Φ25.4	/	52.9	2	F30	27200	794	45600	675	850	150
38"	410	1125	1070	1022	40-Φ28.6	/	54.5	2	F35	31000	1100	50560	675	855	150
40"	410	1175	1120.8	1080	44-Φ28.6	/	56.1	2	F35	32000	1250	56000	725	885	150
42"	410	1225	1171.6	1130	48-Φ28.6	/	59.3	2	F35	34000	1300	61800	777	952	180
44"	470	1275	1222.4	1181	52-Φ28.6	/	60.9	2	F35	36000	1336	67800	786	965	180
48"	470	1390	1335.1	1289	44-Φ31.8	/	65.6	2	F40	45400	1800	82500	847	1020	180
52"	530	1495	1436.7	1391	52-Φ31.8	/	70.4	2	F40	56000	1900	104336	896	1080	180
56"	530	1600	1543	1492	60-Φ31.8	/	73.6	2	F40	70500	2000	121000	941	1175	200
60"	530	1725	1662.1	1600	52-Φ34.9	/	76.7	2	F40	86000	3300	160380	995	1225	200

More specifications, please contact our company

BREN

API Triple Offset Butterfly Valve

Double Flange

Main External Dimensions Unit: mm

DN in(mm)	L	D1	D2	D3	n-Φ	n-M	b	f	ISO5211	Nm	Weight	CV	H	H1	H2
Class 300															
2"	108	165	127	92.1	4-Φ19.1	4-5/8-11UNC	22.7	2	F07	78	13	58	82.5	160	40
2.5"	112	190	149.2	104.8	4-Φ22.2	4-1/4-10UNC	25.9	2	F07	88	18	109	95	172	40
3"	114	210	168.3	127	4-Φ22.2	4-1/4-10UNC	29	2	F07	144	23.2	165	105	207	40
4"	127	255	200	157.2	4-Φ22.2	4-1/4-10UNC	32.2	2	F07	258	32	318	127.5	222	45
5"	140	280	235	185.7	4-Φ22.2	4-1/4-10UNC	35.4	2	F10	412	42	648	170	272	60
6"	140	320	269.9	215.9	8-Φ22.2	4-1/4-10UNC	37	2	F12	798	58	682	190	292	60
8"	152	380	330.2	269.9	8-Φ25.4	4-7/8-9UNC	41.7	2	F14	1960	85	1230	230	345	80
10"	165	445	387.4	323.8	12-Φ28.6	4-1-8UNC	48.1	2	F16	2270	121.6	2370	260	400	80
12"	178	520	450.8	381	12-Φ31.8	4-1 1/8-8UN	51.3	2	F16	2780	180	3520	300	440	85
14"	190	585	514.4	412.8	16-Φ31.8	4-1 1/8-8UN	54.4	2	F25	5680	245	4782	330	485	90
16"	216	650	571.5	469.9	16-Φ34.9	4-1 1/4-8UN	57.6	2	F25	7800	334	6280	365	510	90
18"	222	710	628.6	533.4	20-Φ34.9	4-1 1/4-8UN	60.8	2	F25	8956	400	7980	405	550	120
20"	229	775	685.8	584.2	20-Φ34.9	4-1 1/4-8UN	64	2	F30	11518	594	10800	440	600	120
22"	267	840	743	641.4	20-Φ41.3	4-1 1/2-8UN	67.1	2	F30	15800	700	13030	480	610	150
24"	267	915	812.8	692.2	20-Φ41.3	4-1 1/2-8UN	70.3	2	F30	18393	800	16180	520	675	150
26"	292	865	803.3	737	24-Φ34.9	8-1 1/4-8UN	89.4	2	F35	24000	720	19327	575	745	150
28"	292	920	857.2	787	28-Φ34.9	8-1 1/4-8UN	89.4	2	F35	27478	920	22410	600	780	180
30"	318	990	920.8	845	28-Φ38.1	8-1 3/8-8UN	94.1	2	F35	38971	1100	27090	635	815	180
32"	318	1055	977.9	902	24-Φ41.3	8-1 1/2-8UN	103.6	2	F40	41150	1100	33050	665	895	180
34"	330	1110	1031.9	953	28-Φ41.3	8-1 1/2-8UN	103.6	2	F40	48200	1600	37320	686	930	180
36"	330	1170	1089	1010	24-Φ44.5	8-1 5/8-8UN	103.6	2	F40	53700	1975	42090	712	950	180
38"	410	1220	1139.8	1060	28-Φ44.5	8-1 5/8-8UN	111.6	2	F40	63000	2017.6	47000	764	950	200
40"	410	1275	1190.6	1114	32-Φ44.5	8-1 5/8-8UN	116.3	2	F40	68370	2350	48964	784	960	200
44"	470	1385	1295.4	1219	32-Φ47.6	8-1 3/4-8UN	127.5	2	F40	82650	2600	62500	839	1010	200
48"	470	1510	1416	1327	32-Φ50.8	8-1 7/8-8UN	129	2	F48	108000	3200	69350	916	1090	250
52"	530	1615	1517.6	1429	40-Φ50.8	8-1 7/8-8UN	143.3	2	F48	123000	4288	81847	972	1150	250
56"	530	1765	1651	1537	28-Φ60.3	8-2 1/4-8UN	154.4	2	F48	156000	5440	94390	1087	1270	290
60"	530	1880	1763.7	1651	32-Φ60.3	8-2 1/4-8UN	151.3	2	F60	210000	6160	108400	1145	1370	290
Class 600															
2"	150	165	127	92.1	4-Φ19.1	4-5/8-11UNC	32.4	7	F07	162	15	42	82.5	190	40
2.5"	170	190	149.2	104.8	4-Φ22.2	4-1/4-10UNC	35.6	7	F07	208	22	72	95	210	40
3"	180	210	168.3	127	4-Φ22.2	4-1/4-10UNC	38.8	7	F10	340	30	107	105	242	40
4"	190	275	215.9	157.2	4-Φ25.4	4-7/8-9UNC	45.1	7	F12	633	50	250	137.5	242	60
5"	200	330	266.7	185.7	4-Φ28.6	4-1-8UNC	51.5	7	F12	960	88	416	188	282	60
6"	210	355	292.1	215.9	8-Φ28.6	4-1-8UNC	54.7	7	F16	1630	118	600	210	345	65
8"	230	420	349.2	269.9	8-Φ31.8	4-1 1/8"-8UN	62.6	7	F16	3540	166	1079	245	380	80
10"	250	510	431.8	323.8	12-Φ34.9	4-1 1/4-8UN	70.5	7	F25	5462	248	1708	292	440	90
12"	270	560	489	381	16-Φ34.9	4-1 1/4-8UN	73.7	7	F25	6018	310	2620	320	465	90
14"	290	605	527	412.8	16-Φ38.1	4-1 3/8-8UN	76.9	7	F25	10913	394	4062	350	527	120
16"	310	685	603.2	469.9	16-Φ41.3	4-1 1/2-8UN	83.2	7	F30	15757	546	5292	405	570	150
18"	330	745	654	533.4	16-Φ44.5	4-1 5/8-8UN	89.6	7	F35	19805	728	7395	440	615	150
20"	350	815	723.9	584.2	16-Φ44.5	8-1 5/8-8UN	95.9	7	F35	25808	890	9320	543	670	150
22"	370	870	777.7	641.4	16-Φ47.6	8-1 3/4-8UN	102.2	7	F40	40258	1100	12260	560	705	180
24"	390	940	838.2	692.2	16-Φ50.8	8-1 7/8-8UN	108.6	7	F40	44799	1280	13578	597	735	180
26"	410	890	806.4	727	20-Φ44.5	8-1 5/8-8UN	118.2	7	F40	54490	1300	16490	590	730	180
28"	430	950	863.6	784	20-Φ47.6	8-1 3/4-8UN	122.9	7	F40	66593	1440	20326	620	780	180
30"	450	1020	927.1	841	20-Φ50.8	8-1 7/8-8UN	132.5	7	F48	79506	1680	23400	675	850	180
32"	470	1085	984.2	895	20-Φ54	8-2-8UN	137.2	7	F48	90160	2200	26370	705	890	200
36"	510	1215	1104.9	1010	20-Φ60.3	8-2 1/4-8UN	153.1	7	F48	117500	2656	32816	760	970	250

More specifications, please contact our company

API High Performance Butterfly Valve



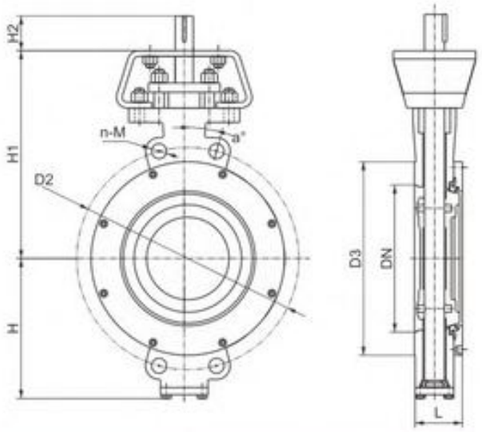

Main External Dimensions Unit: mm

DN in(mm)	L	D2	D3	f	a°	n-M	ISO5211	Nm	Weight	CV	H	H1	H2
Class 150													
2"	43	120.7	92.1	/	/	/	F07	24	4	65	64	162	40
2.5"	46	139.7	104.8	/	/	/	F07	35	5.5	113	70	172	40
3"	48	152.4	127	/	/	/	F07	47	6	172	85	182	40
4"	54	190.5	157.2	/	/	/	F07	75	8	385	92	208	40
5"	57	215.9	185.7	/	/	/	F07	112	10	658	120	222	40
6"	57	241.3	215.9	/	/	/	F10	169	14	1050	150	272	40
8"	64	298.5	269.9	/	/	/	F10	325	23	2180	187	307	60
10"	71	362	323.8	/	/	/	F12	558	29	3280	215	337	60
12"	81	431.8	381	/	/	/	F14	1200	40	5100	224	380	80
14"	92	476.3	412.8	/	/	/	F16	1620	70	5800	268	405	80
16"	102	539.8	469.9	2	11.25	4-1-8UNC	F16	2130	82	9287	317	455	80
18"	114	577.9	533.4	2	11.25	4-1 1/8-8UN	F16	3100	115	11400	347	485	90
20"	127	635	584.2	2	9	4-1 1/8-8UN	F16	4000	220	13800	380	510	90
22"	154	692.2	641.4	2	9	4-1 1/4-8UN	F25	5200	240	17000	430	575	90
24"	154	749.3	692.2	2	9	4-1 1/4-8UN	F25	5800	260	21600	452	605	90

More specifications, please contact our company

BREN

API High Performance Butterfly Valve

Main External Dimensions Unit: mm

DN in(mm)	L	D2	D3	f	a°	n-M	ISO5211	Nm	Weight	CV	H	H1	H2
Class 300													
2"	43	127	92.1	/	/	/	F07	70	5	65	64	162	40
2.5"	46	149.2	104.8	/	/	/	F07	95	6	113	70	172	40
3"	48	168.3	127	/	/	/	F07	112	7	172	85	182	40
4"	54	200	157.2	/	/	/	F07	146	10	385	92	208	40
5"	59	235	185.7	2	22.5	4-3/4-10UNC	F07	248	13	658	165	250	60
6"	59	269.9	215.9	2	15	4-3/4-10UNC	F10	378	16	1050	172	260	60
8"	73	330.2	269.9	2	15	4-7/8-9UNC	F12	852	23	1895	210	320	60
10"	83	387.4	323.8	2	11.25	4-1-8UNC	F14	1390	55	3050	247	355	60
12"	92	450.8	381	2	11.25	4-1 1/8-8UN	F16	2200	70	4800	286	411	80
14"	117	514.4	412.8	2	9	4-1 1/8-8UN	F16	3450	100	5395	321	447	90
16"	133	571.5	469.9	2	9	4-1 1/4-8UN	F25	4080	150	7900	362	510	90
18"	149	628.6	533.4	2	7.5	4-1 1/4-8UN	F25	5920	220	10086	405	550	110
20"	159	685.8	584.2	2	7.5	4-1 1/4-8UN	F25	7900	300	11300	435	590	120
22"	181	743	641.4	2	7.5	4-1 1/2-8UN	F25	10500	330	13000	480	610	150
24"	181	812.8	692.2	2	7.5	4-1 1/2-8UN	F25	11800	360	16980	505	645	150
Class 600													
2"	54	127	92.1	7	/	/	F07	125	7	48	64	162	40
2.5"	54	149.2	104.8	7	22.5	4-3/4-10UNC	F07	130	11	86	95	210	40
3"	54	168.3	127	7	22.5	4-3/4-10UNC	F07	145	14	132	105	227	40
4"	64	215.9	157.2	7	22.5	4-7/8-9UNC	F10	189	16	270	120	242	60
5"	78	266.7	185.7	7	22.5	4-1-8UNC	F10	630	30	580	188	282	60
6"	78	292.1	215.9	7	15	4-1-8UNC	F12	720	50	850	210	345	60
8"	102	349.2	269.9	7	15	4-1 1/8-8UN	F16	1500	70	1400	245	380	80
10"	117	431.8	323.8	7	11.25	4-1 1/4-8UN	F16	2720	100	2010	287	435	90
12"	140	489	381	7	9	4-1 1/4-8UN	F25	4688	150	2980	315	475	90
14"	155	527	412.8	7	9	4-1 3/8-8UN	F25	5237	210	3900	357	510	120
16"	178	603.2	469.9	7	9	4-1 1/2-8UN	F30	8980	360	5000	406	570	150
18"	200	654	533.4	7	9	4-1 5/8-8UN	F30	12090	500	6000	475	633	150
20"	216	723.9	584.2	7	7.5	8-1 5/8-8UN	F35	18000	580	8000	543	670	150
22"	232	777.8	641.4	7	7.5	8-1 3/4-8UN	F35	20000	630	9500	560	705	180
24"	232	838.2	692.2	7	7.5	8-1 7/8-8UN	F35	24100	660	11000	597	735	180

More specifications, please contact our company

API Concentric Rubber Seat Butterfly Valve



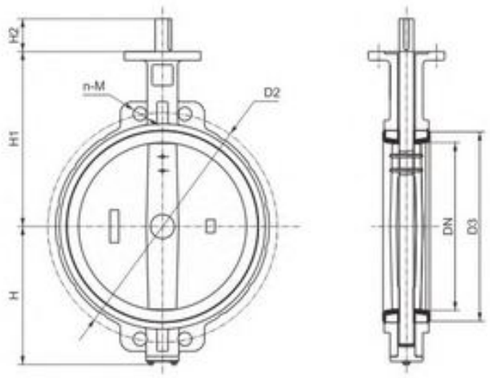

Main External Dimensions Unit: mm

DN in(mm)	L	D2	D3	a°	n-M	ISO5211	Nm	Weight	CV	H	H1	H2
Class 150												
2"	43	120.7	76	45	4-Φ19.1	F07	10	2.5	130	82	133	40
2.5"	46	139.7	89	45	4-Φ19.1	F07	18	3	230	88	144	40
3"	46	152.4	104	45	4-Φ19.1	F07	25	3.5	340	97	148	40
4"	52	190.5	135	22.5	4-Φ19.1	F07	30	5	648	114	168	40
5"	56	215.9	159	22.5	4-Φ22.2	F07	80	7	1250	127	182	40
6"	56	241.3	188	22.5	4-Φ22.2	F07	110	8	1830	140	205	45
8"	60	298.5	238	22.5	4-Φ22.2	F10	190	16	3400	174	244	45
10"	68	362	295	15	4-Φ25.4	F10	360	27	5270	200	232	60
12"	78	431.8	350	15	4-Φ25.4	F12	760	39	7590	224	290	60
14"	78	476.3	395	15	4-Φ28.6	F14	820	54	10332	265	330	80
16"	102	539.8	450	11.25	4-Φ28.6	F14	1180	77	13727	314	360	80
18"	114	577.9	504	11.25	4-1 1/8-8UN	F16	1320	96	17372	342	507	95
20"	127	635	554	9	4-Φ31.8	F16	2077	147	20105	376	440	95
24"	154	749.3	654	9	4-1 1/4-8UN	F16	4200	223	28952	439	605	95
28"	165	795.3	753	4.5	4-3/4-10UNC	F25	4800		42038	470	680	100
32"	190	900.1	864	3.75	4-3/4-10UNC	F25	8000		54900	530	735	125
36"	200	1009.6	972	4.09	4-7/8-9UNC	F25	11000		69490	590	815	125
40"	216	1120.8	1080	4.09	4-1-8UNC	F30	13800		80420	655	885	125
48"	276	1335.1	1289	4.09	4-1 1/8-8UN	F30	18920		123600	745	950	150

More specifications, please contact our company

API Clamped Plug Valve



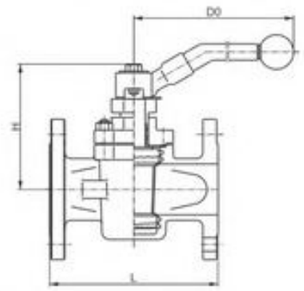

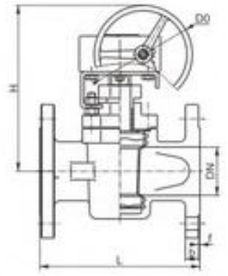

Main External Dimensions

DN	DN/in	L	D0	H	Weight (kg)
Class150					
15	1/2	108	120	85	2
20	3/4	117	140	95	3
25	1	127	140	105	4.5
32	1 1/4	140	200	115	5.2
40	1 1/2	165	250	125	7.5
50	2	178	250	140	11
65	2 1/2	190	300	150	12.5
80	3	203	300	185	18
100	4	229	350	200	23
125	5	254	350	215	32
150	6	267	200	455	52
200	8	292	240	495	115
250	10	330	280	555	195
300	12	356	320	605	305
350	14	381	320	680	325
400	16	406	360	715	340
Class300					
15	1/2	140	160	85	2.5
20	3/4	152	160	95	4
25	1	165	200	105	5
32	1 1/4	178	250	115	6
40	1 1/2	190	250	125	8.5
50	2	216	300	140	13
65	2 1/2	241	300	150	15
80	3	283	350	185	24
100	4	305	350	200	27
125	5	381	400	225	40
150	6	403	200	460	65
200	8	419	240	495	145
250	10	457	280	560	255
300	12	502	320	610	325
350	14	762	360	685	355
Class600					
25	1	216	250	125	7
32	1 1/4	229	250	135	8.2
40	1 1/2	240	300	140	10.8
50	2	292	350	150	12.5
65	2 1/2	330	350	175	15.3
80	3	356	400	195	25
100	4	432	400	215	29.5
150	6	559	280	500	70

More specifications, please contact our company

API Pressure Balance Grease Injection Plug Valve



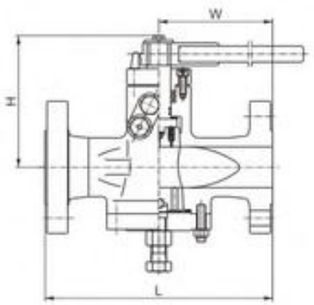

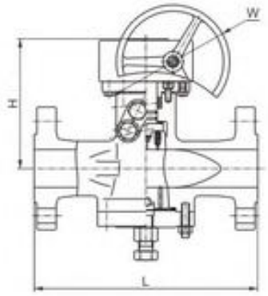

≥4" for worm gear drive

Main External Dimensions

Class150

Size		L-BW	L-RF	L-RTJ	H	W
In	mm					
1	25	203	127	140	185	500
1-1/2	40	229	165	178	210	600
2	50	267	178	190	215	600
2-1/2	65	305	190	203	250	820
3	80	330	203	216	270	820
4	100	356	229	241	300	300
6	150	394	267	406	365	320
8	200	457	292	470	400	320
10	250	559	330	546	450	350
12	300	635	356	622	510	380
14	350	686	381	699	590	380

More specifications, please contact our company

BREN

API Pressure Balance Grease Injection Plug Valve

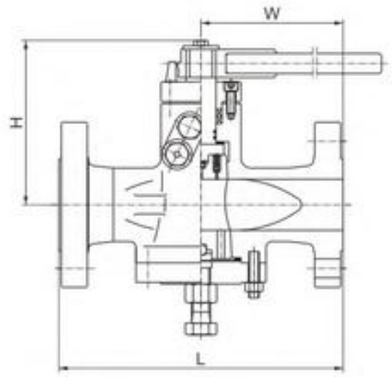

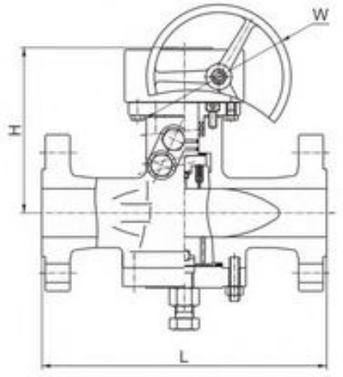

≥4" for worm gear drive

Main External Dimensions

Class300

Size		L-BW	L-RF	L-RTJ	H	W
In	mm					
1	25	203	165	178	185	500
1-1/2	40	229	190	203	210	600
2	50	267	216	232	215	820
2-1/2	65	305	241	257	250	1000
3	80	330	283	298	270	1000
4	100	356	305	321	300	300
6	150	457	403	419	365	320
8	200	521	419	435	400	320
10	250	559	457	473	450	350
12	300	635	502	518	510	380
14	350	762	762	778	590	380

More specifications, please contact our company

API Pressure Balance Grease Injection Plug Valve

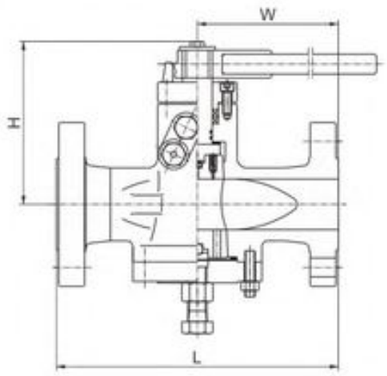

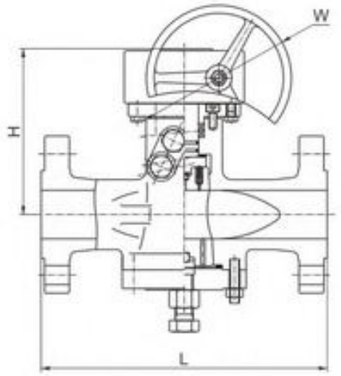

≥4" for worm gear drive

Main External Dimensions

Class600

Size		L-BW	L-RF	L-RTJ	H	W
In	mm					
1	25	216	216	216	185	500
1-1/2	40	241	241	241	210	600
2	50	292	292	295	215	820
2-1/2	65	330	330	333	250	1000
3	80	356	356	359	270	1000
4	100	432	432	435	300	300
6	150	559	559	562	365	320
8	200	660	660	664	400	320
10	250	787	787	791	450	350
12	300	938	838	841	510	380
14	350	889	889	892	590	380

More specifications, please contact our company

API Pressure Balance Grease Injection Plug Valve

GQ47/347/647/947H/Y

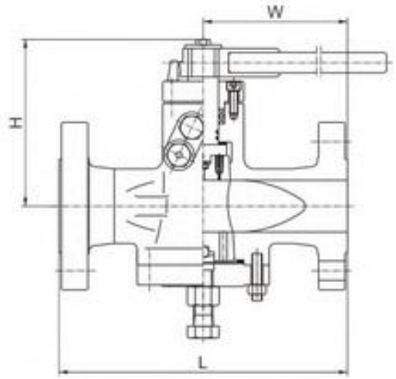

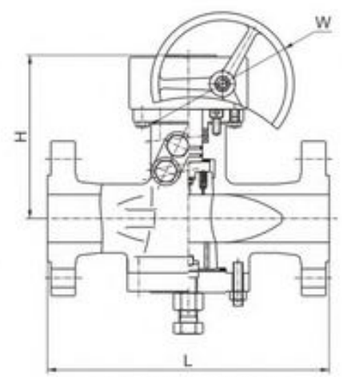

≥4" for worm gear drive

Main External Dimensions

Class900

Size		L-BW	L-RF	L-RTJ	H	W
In	mm					
1	25	254	254	254	185	500
1-1/2	40	305	305	305	210	600
2	50	368	368	371	215	820
2-1/2	65	419	419	422	250	1000
3	80	381	381	384	270	1000
4	100	457	457	460	300	300
6	150	610	610	613	365	320
8	200	737	737	740	400	320
10	250	838	838	841	450	350
12	300	965	965	968	510	380
14	350	1029	1130	1140	590	380

More specifications, please contact our company